Wiring Schematic 0086776 - Index

TABLE OF CONTENTS
H4RELXI 45 FEET
SCHEMATIC DIAGRAMS INDEX

	DESCRIPTION	SHEET	BB #	REV
	INDEX	1	0086776	A
	A ZONE	2	0076299	F
	DASH	3	0076293	D
	B-ZONE	4	0076452	A
	FRAME	5	0076432	A
	TOW PLUG HARNESS WRG	6	0084640	-
	REAR PDU INTERFACE	7	0076577	A
	D-ZONE	8	0082390	A
	ENGINE,C13	9	0076434	A
	FRONT,BODY	10	0086799	-
	DATALINK	11	0076506	-
	LIVING ROOM,BED ROOM,C/S	12	0075796	A
	LIVING ROOM,BED ROOM,R/S	13	0100164	-
	LR,DIN,SLIDE-OUT,BATH FLP A	14	0081856	-
	LR,DIN,SLIDE-OUT,BATH FLP B	15	0086740	-
	BAY,DC,LOAD CENTER	16	0076147	A
	BAY,MULTIPLEX	17	0076203	A
	OVERHEAD PANEL,L/H GAUGES	18	0069318	-
	SLIDE-OUT CONTROLLER,3-ROOM	19	0075037	B
	EMS,LOAD CENTER,120V	20	0076352	-
	AUXILIARY,120V,INVERTER	21	0080496	-
	CABLE,POWER,DISTRIBUTIONN	22	0075825	D
	DATALOOPS	23	0070060	-
	FRONT,A/V	24	0075601	B
A	120VAC,POWER DISTRIBUTION,W/EMS,FPLA	25	0091200	B
	POWER DISTRIBUTION,DC	26	0074465	-
	REAR A/V	27	0075600	-
	ONSTAR COMMUNICATION	28	0076919	-
	LUGGAGE COMP 1	29	0078105	-
	LUGGAGE COMP 2	30	0080226	-
	LUGGAGE COMP 3	31	0081265	-
	LUGGAGE COMP 4	32	0082266	-
	LUGGAGE COMP 5	33	0084199	-
	DASH,A/C CONTROLS	34	0086141	-
	TAIL LIGHTS	35	0078072	-
	BRAKE LIGHTS	36	0075992	-
D	TRANSMISSION	37	0102063	-
	ENGINE COMPARTMENT LIGHTS	38	0086078	-
	WEBASTO,HYDRONIC CONTROL SYSTEM	39	0086777	-
	ENGINE,DASH,WEBASTO,HEATING SYSTEM	40	0086778	-
	LR,KIT,SLIDE-OUT,BATH FLP A	41	0086762	-
	LR,KIT,SLIDE-OUT,BATH FLP B	42	0086763	-
A	120VAC,POWER DISTRIBUTION,W/EMS,FPLB	43	0095819	-

	DESCRIPTION	SHEET	BB #	REV
B	SCHEMATIC,WRG,LANDING LIGHTS	44	0089285	-
B	SCHEMATIC,WRG,GENERATOR SYS,120/240VAC	45	0089321	-
B	SCHEMATIC,WRG,ENG,DASH,WEB,HEATING,SYS	46	0089322	-
B	SCHEMATIC,WRG,DUAL,MOTOR,SYNCHRONIZER	47	0089536	-
B	SCHEMATIC,WRG,SLIDEOUT,PLC,CONTROLLER,4-ROOM	48	0089537	-
B	SCHEMATIC,WRG,DASH,SWITCH,PANELS	49	0098616	-
B	SCHEMATIC,PNEUMATIC,AIR LOCK VALVES,PSI SENSOR	50	0099998	-
C	SCHEMATIC,WRG,HYD,RFTOP A/C,ELEC HT ,CTL	51	0089289	B

SCHEMATIC SYMBOLS

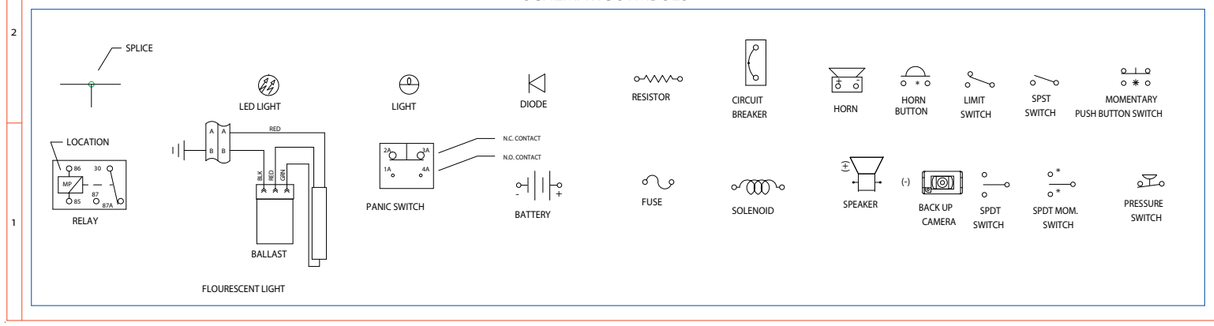

CONTROL WIRE NUMBERING/COLOR CODE SYSTEM

COLOR	LAST DIGIT OF WIRE NUMBER
TAN	1
RED	2
ORANGE	3
YELLOW	4
GREEN	5
BLUE	6
PURPLE	7
GRAY	8
BLACK	9
PINK	0
WHITE	USED FOR ALL GROUNDS

FIRST SERIES OF THE LETTER = THE MULTIPLEX ZONE
FIRST SERIES OF THE NUMBER = THE VOLTAGE AND PIN ASSIGNMENT
OF THE CONNECTOR AT THE MODULE

A2-105

A2 = A ZONE
A2 = A2 MODULE
105 = (1 = 12 VOLTS) (05 = PIN#5 COLOR GREEN)

EXAMPLE: D2-214

D2 = D ZONE
D2 = D2 MODULE
214 = (2 = 24 VOLTS) (14 = PIN #14 COLOR YELLOW)

BLUE BIRD NON I/O CONTROL WIRE NUMBERING/COLOR CODE SYSTEM

24 VOLT WIRES ARE RED
12 VOLT WIRES ARE ORANGE

EXAMPLE: 24VIGN10

24V = 24 VOLTS COLOR RED
IGN = IGNITION
10 = 10 GAUGE WIRE

EXAMPLE: 12VBATT12

12V = 12 VOLTS COLOR ORANGE
BATT = BATTERY
12 = 12 GAUGE WIRE

ALL OTHER WIRES THAT DO NOT FIT INTO THESE CATAGORIES
WILL BE FUNCTION CODED

SCHEMATIC LEGEND

*	SPRING RETURN (MOMENTARY ACTION)
BC	BATTERY COMPARTMENT
BZ	B ZONE
CB	CURB SIDE REAR BULKHEAD
DH	DRIVERS DASH PANEL
DO	DRIVER'S OVERHEAD PANEL
DZ	D ZONE
EB	ENGINE CONTROL BOX
EC	ENGINE COMPARTMENT
FF	FUEL FILL AREA
FP	FUSE PANEL
MP	MAIN ELECTRICAL PANEL
RD	REAR DOOR HEADER
RP	REAR POWER DISTRIBUTION CENTER
SB	STREET SIDE REAR BULKHEAD
SC	STEERING COLUMN
SP	SIDE SWITCH PANEL
TB	TERMINAL BLOCK
TP	TEST PORT PANEL
M	MOTOR
DH	CMP LOC eg. DRIVERS DASH PANEL
	TWISTED PAIR WIRE

LET.	WAS	REVISIONS	DR.	APP.	CCN
D		CHANGE TRANSMISSION SCHEMATIC NUMBER	PB 01/09/05	BT 01/17/05	13131R
C		CHANGE SCHEMATIC DRAWING NUMBER OR REV LEVEL	BT 02/11/06	BT 02/11/06	13177S
B		ADD NEW SCHEMATIC TO DRAWING	BT 12/01/05	BT 12/01/05	13177P
A		CHANGE PART NUMBER FOR 120V SCHEMATIC AND ADD PART NUMBER FOR 120V SCHEMATIC FLOOR B	BT 12/01/05	BT 12/01/05	13131L

CONFIDENTIAL

The information hereon is confidential business information and may not be copied or used for any purpose unless permission is expressly granted in writing by Blue Bird Body Company.

Copyright 2002
Blue Bird Body Company
All rights reserved

CCN 13131F

BLUE BIRD CORPORATION
FORT VALLEY GEORGIA, U.S.A.

SCALE NONE

SCHEMATIC,WRG,INDEX

45H4RE

DR. 01/03/05 BY SS
APP. 01/17/05 BY BT

D 0086776

PAGE __ OF __

INACTIVATED NOS. 0069174

Wiring Schematic 0076299 - A Zone

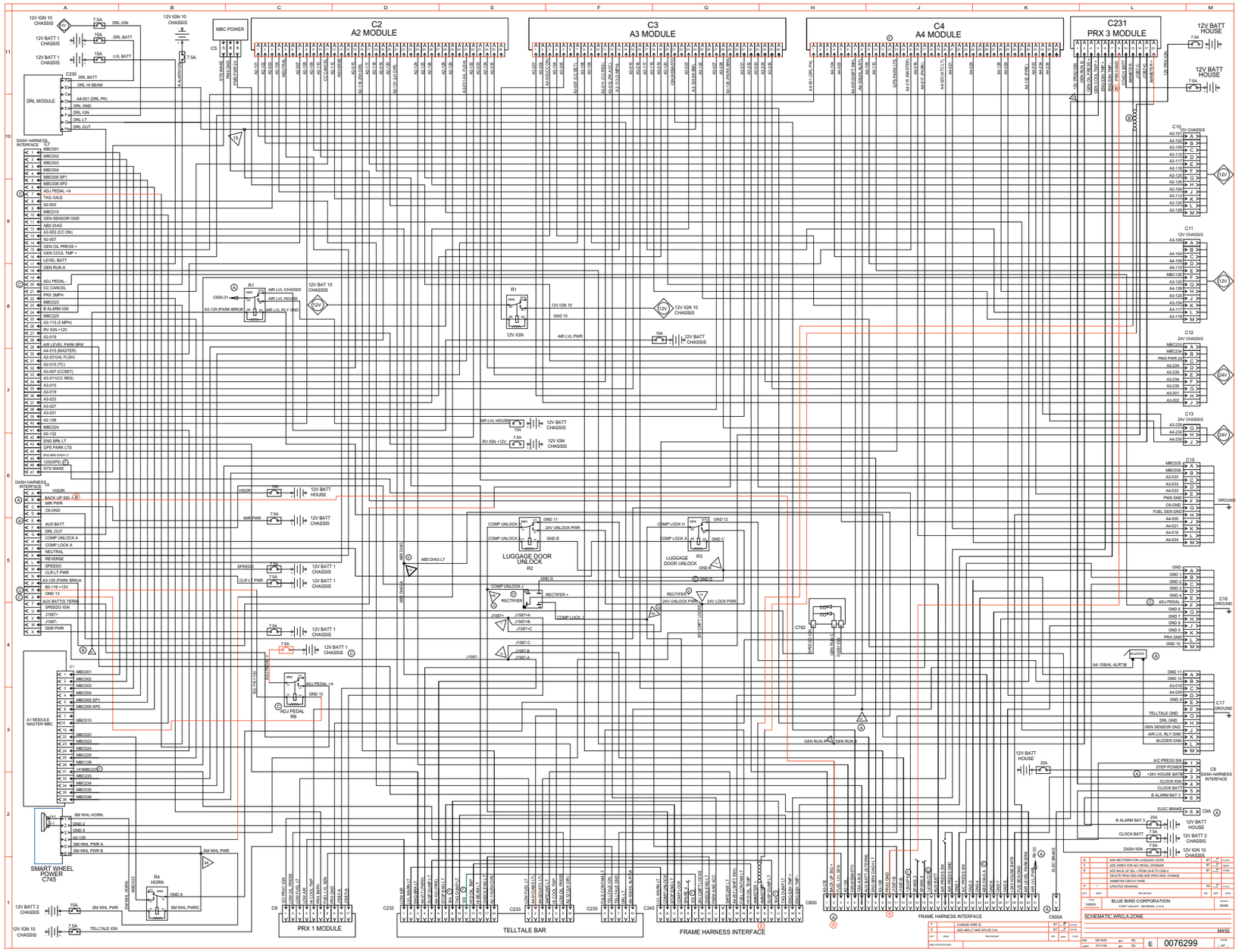

Wiring Schematic 0076299 - A Zone - **Exploded View A**

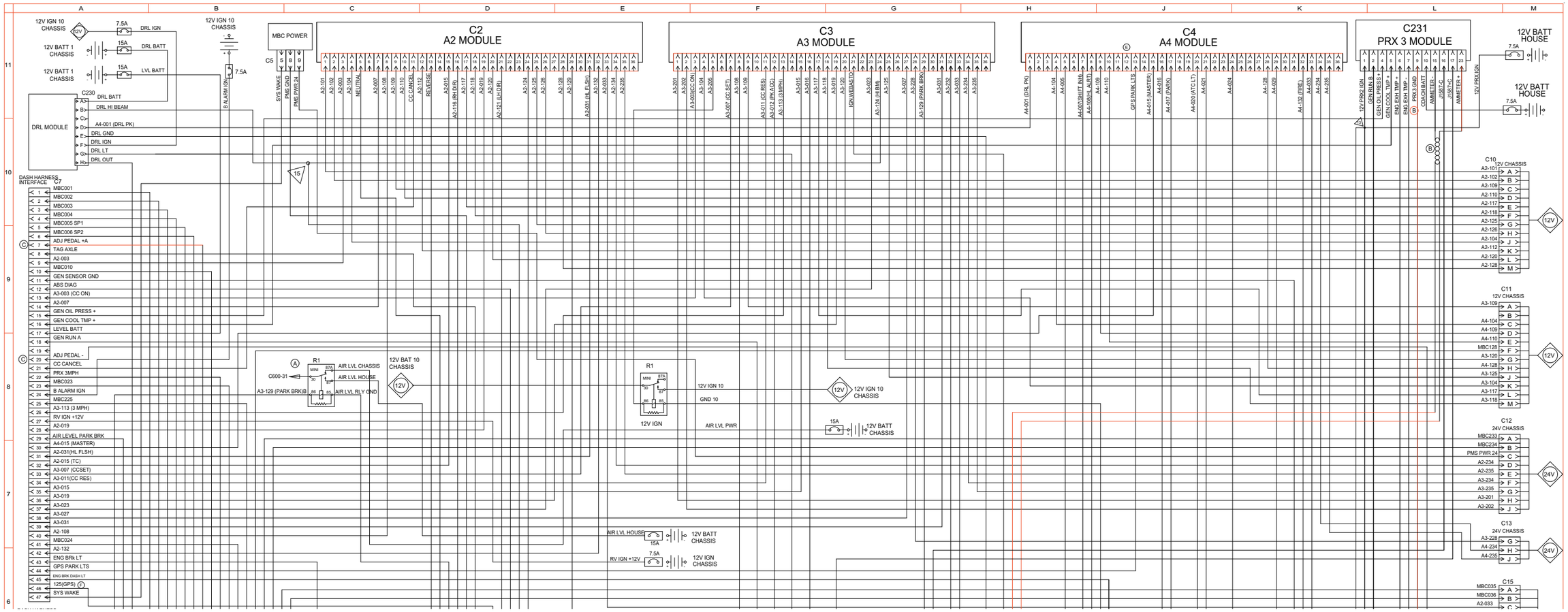

Wiring Schematic 0076299 - A Zone - **Exploded View B**

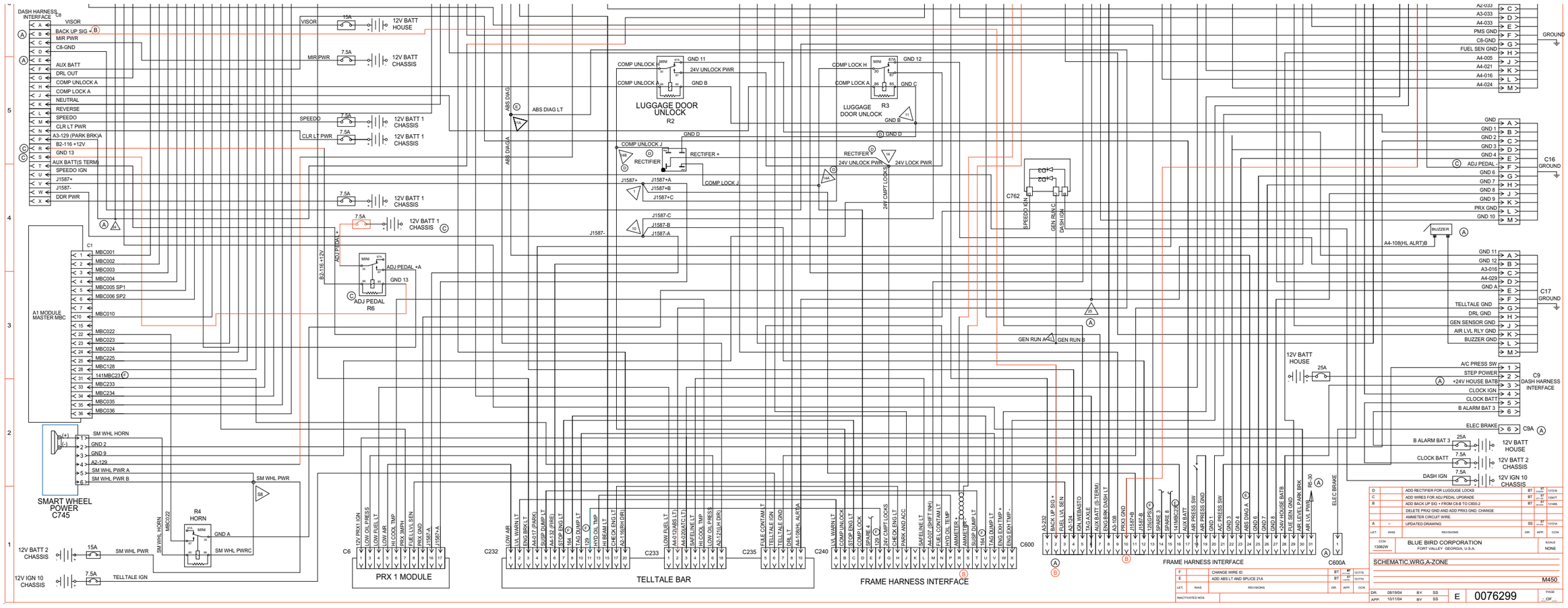

Wiring Schematic 0076293 - Dash

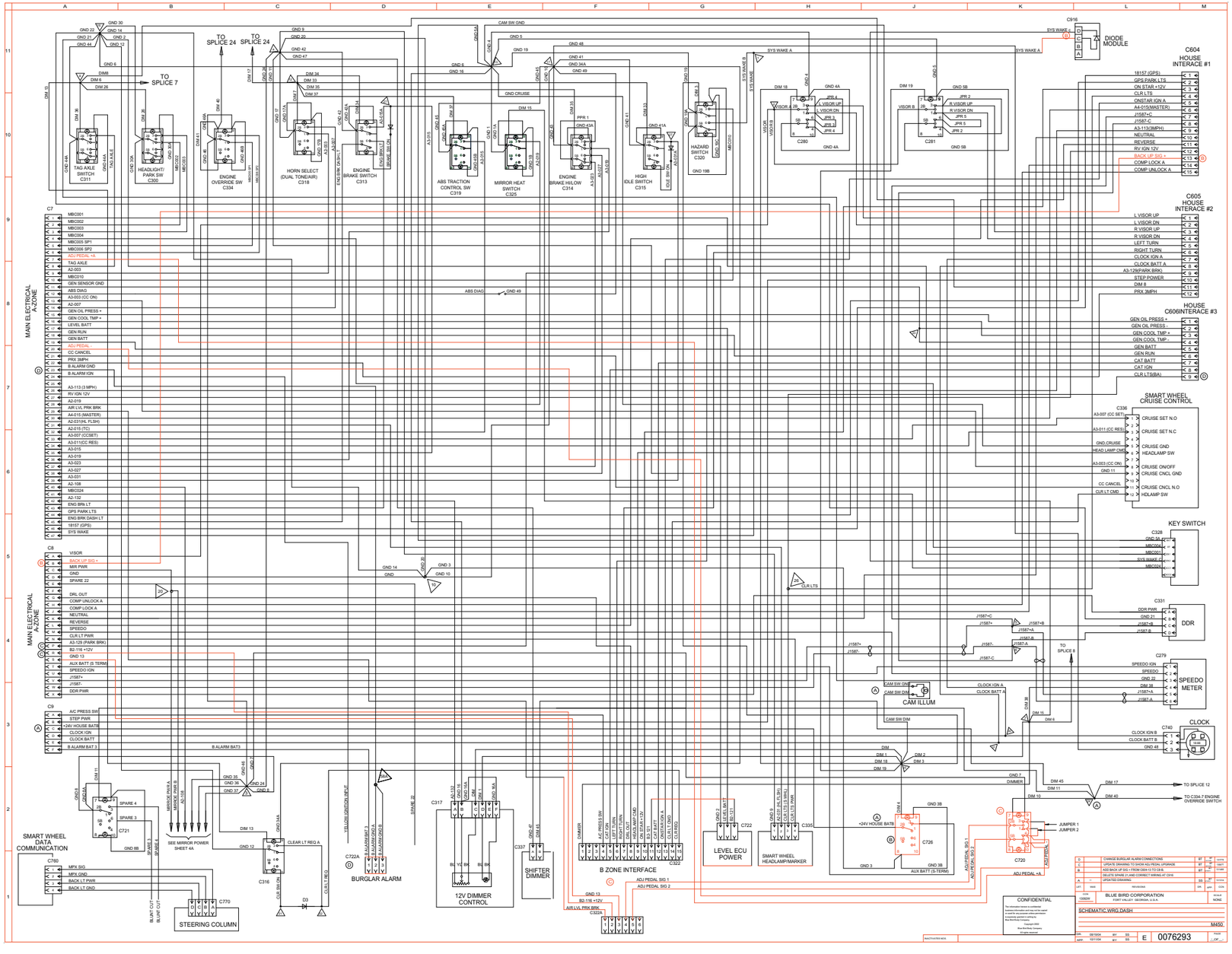

Wiring Schematic 0076293 - Dash - **Exploded View A**

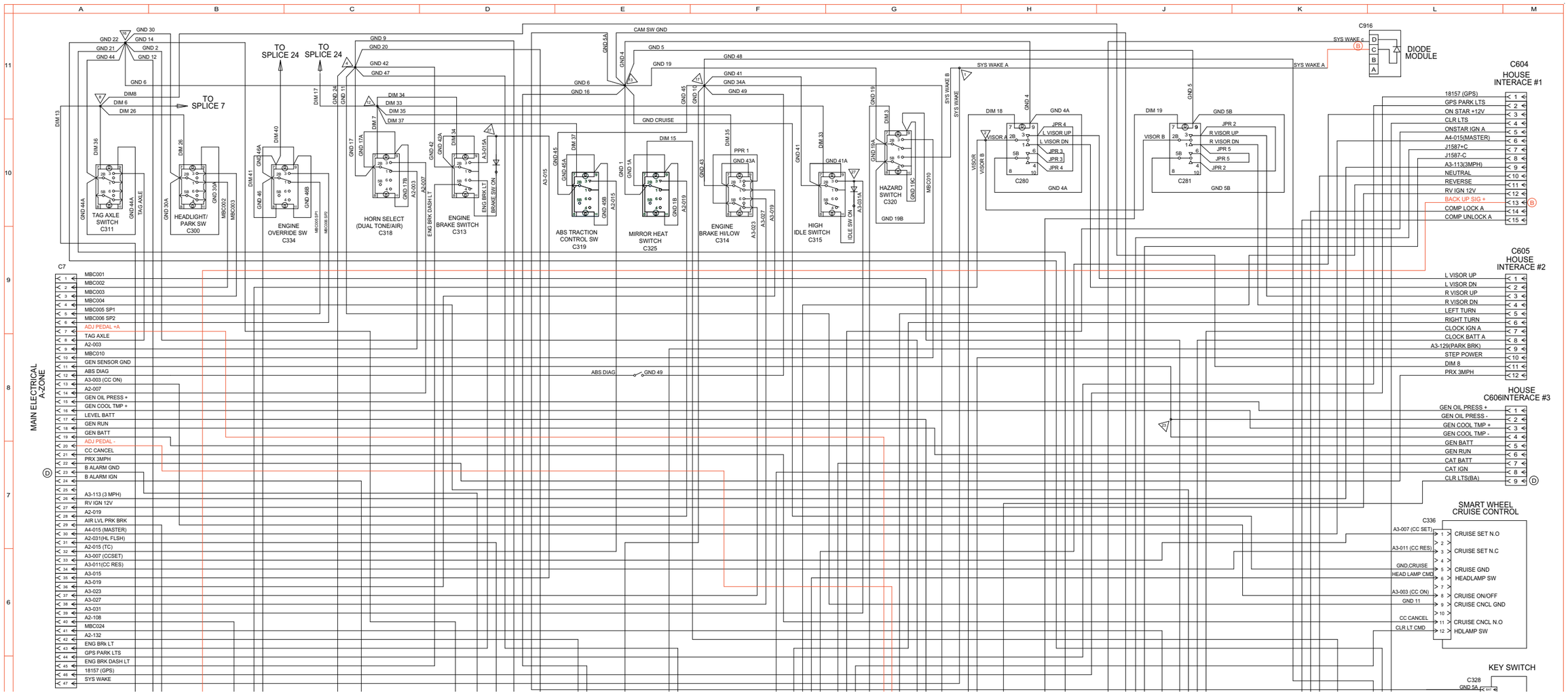

Wiring Schematic 0076293 - **Dash - Exploded View B**

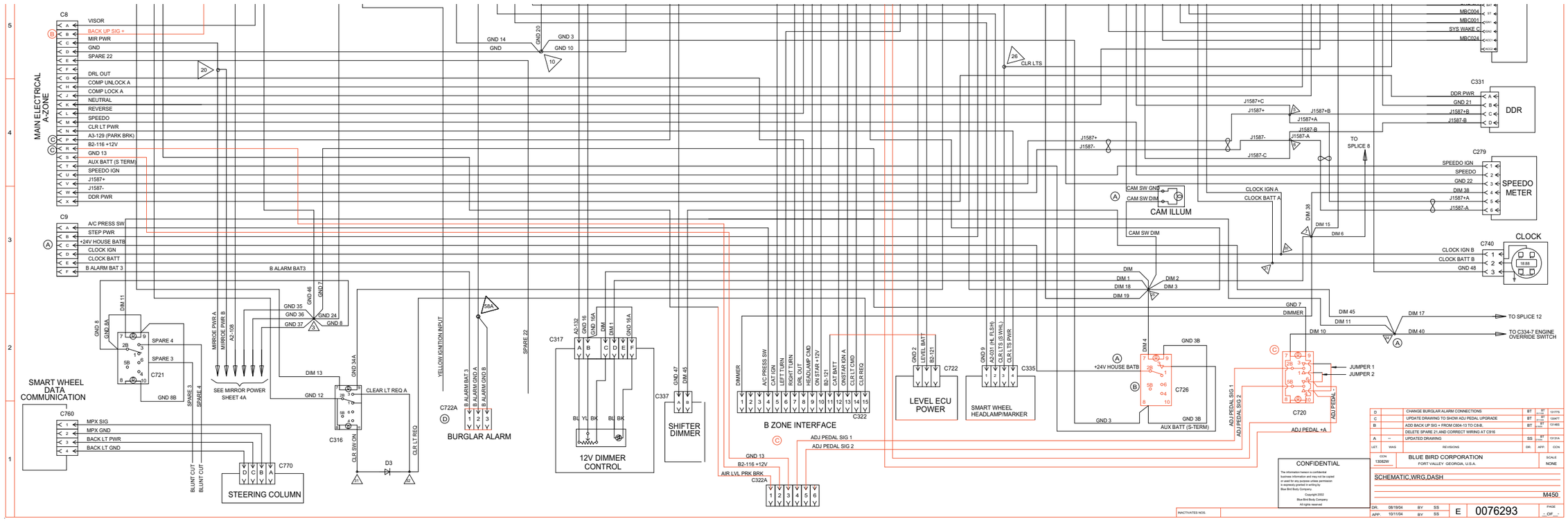

Wiring Schematic 0076452 - B-Zone

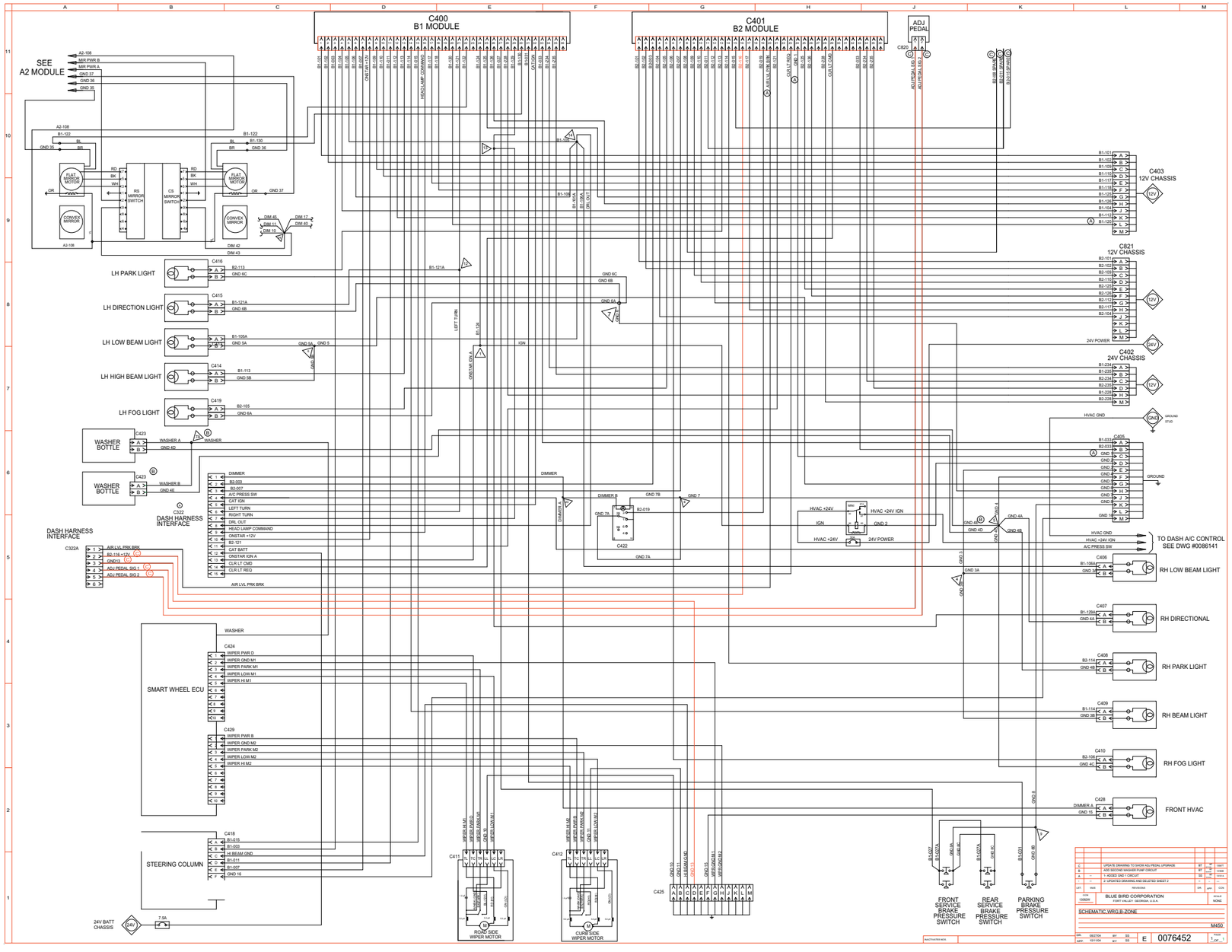

Wiring Schematic 0076452 - B-Zone - **Exploded View A**

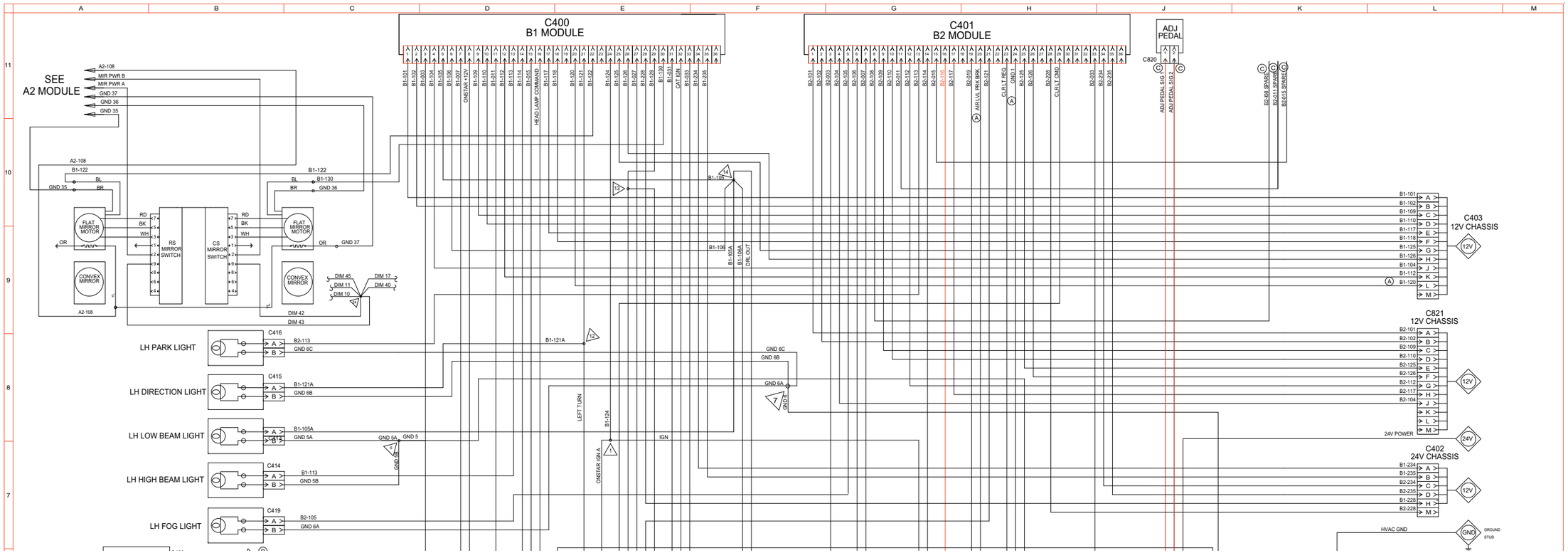

Wiring Schematic 0076452 - B-Zone - **Exploded View B**

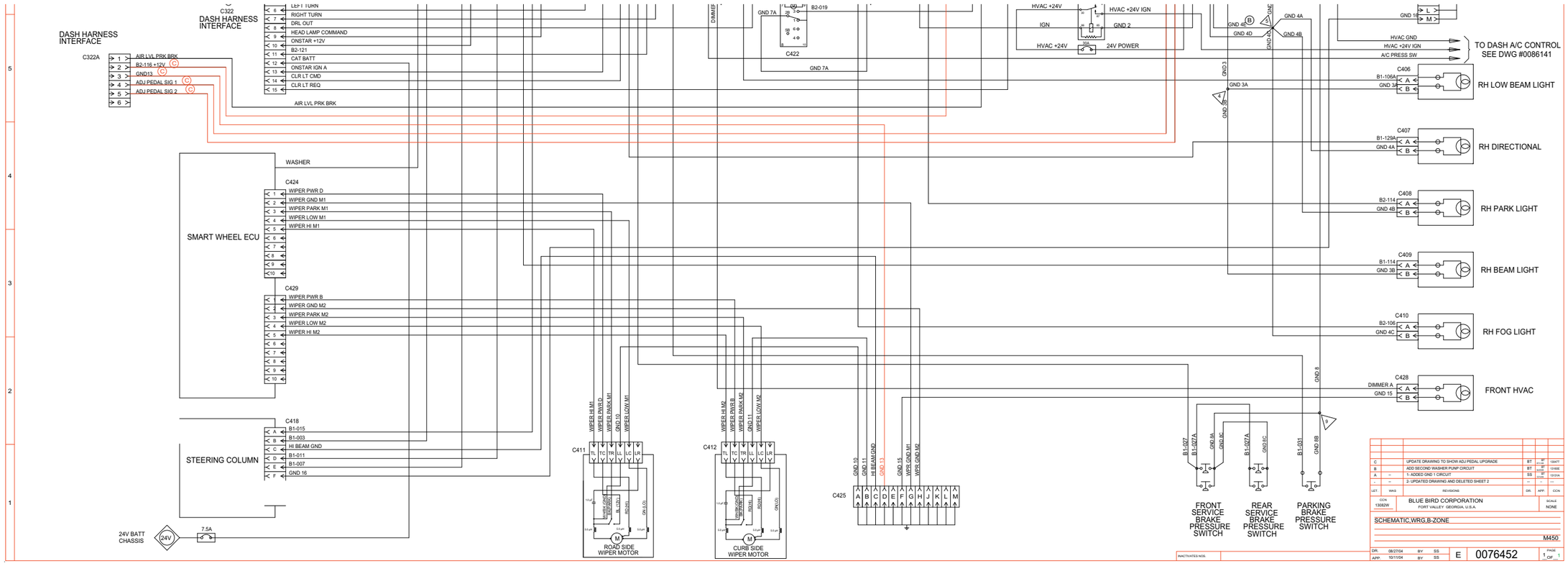

Wiring Schematic 0076432 - Frame

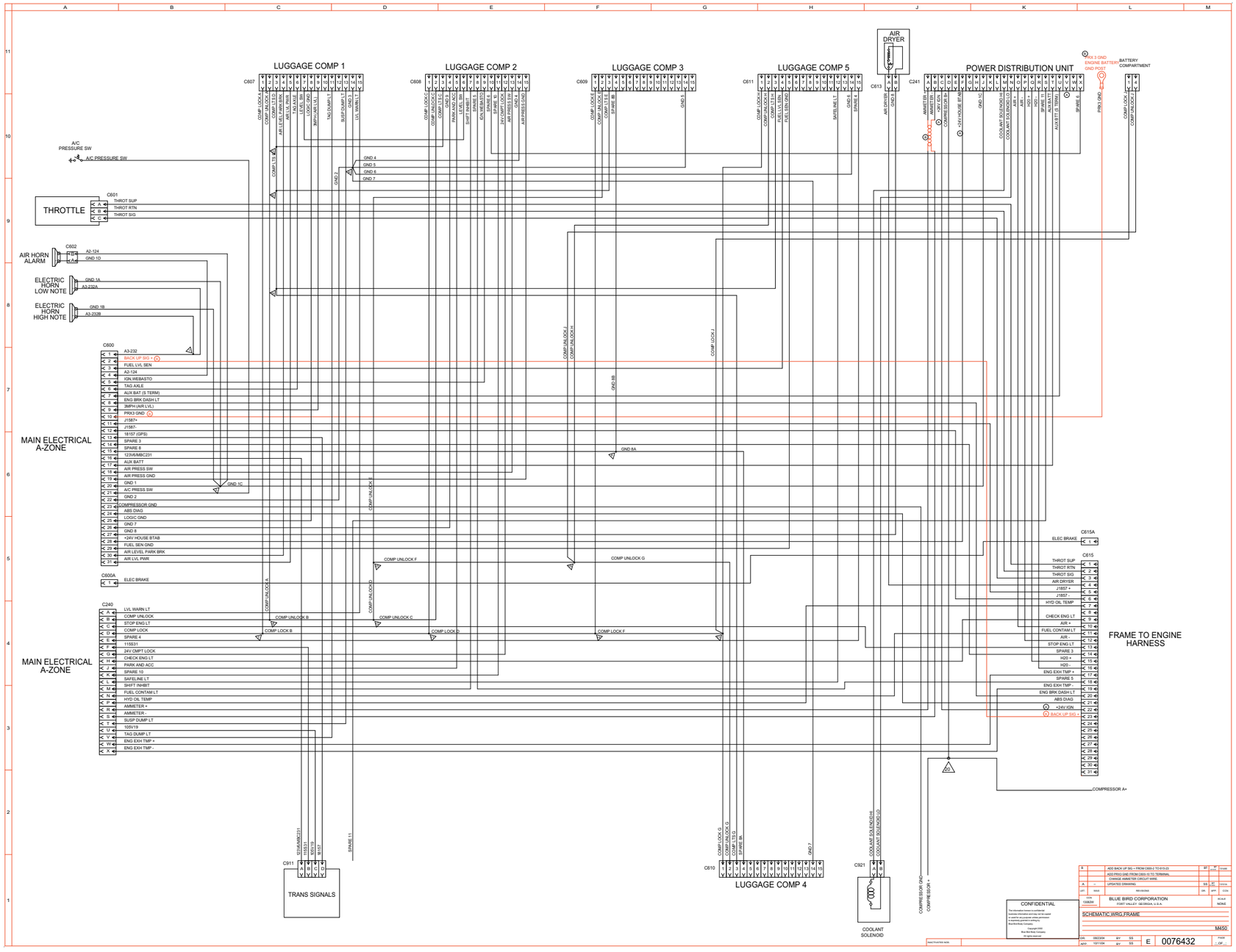

Wiring Schematic 0076432 - Frame - **Exploded View A**

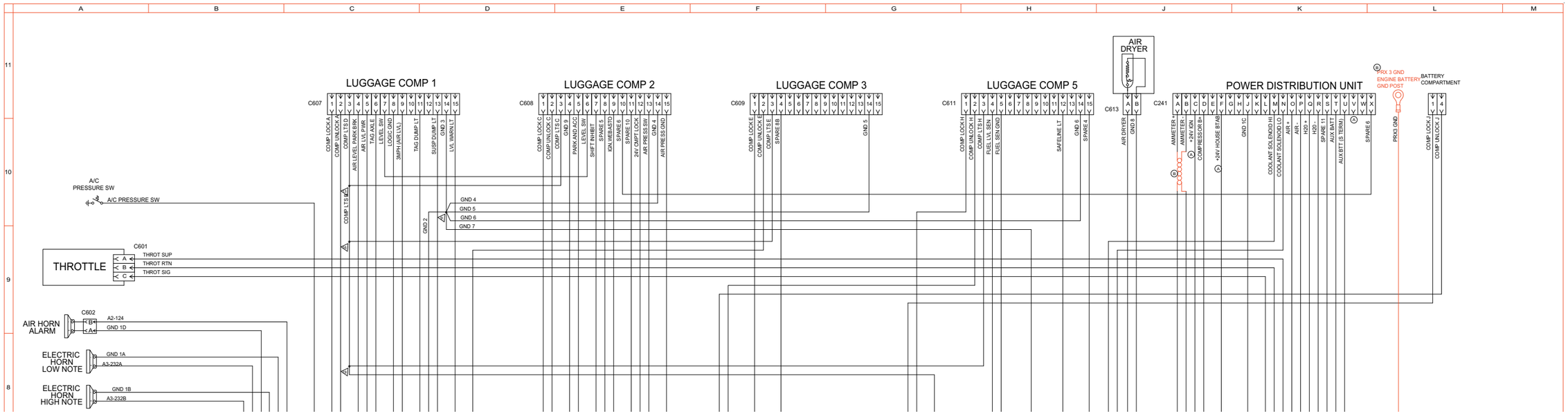

Wiring Schematic 0076432 - Frame - **Exploded View B**

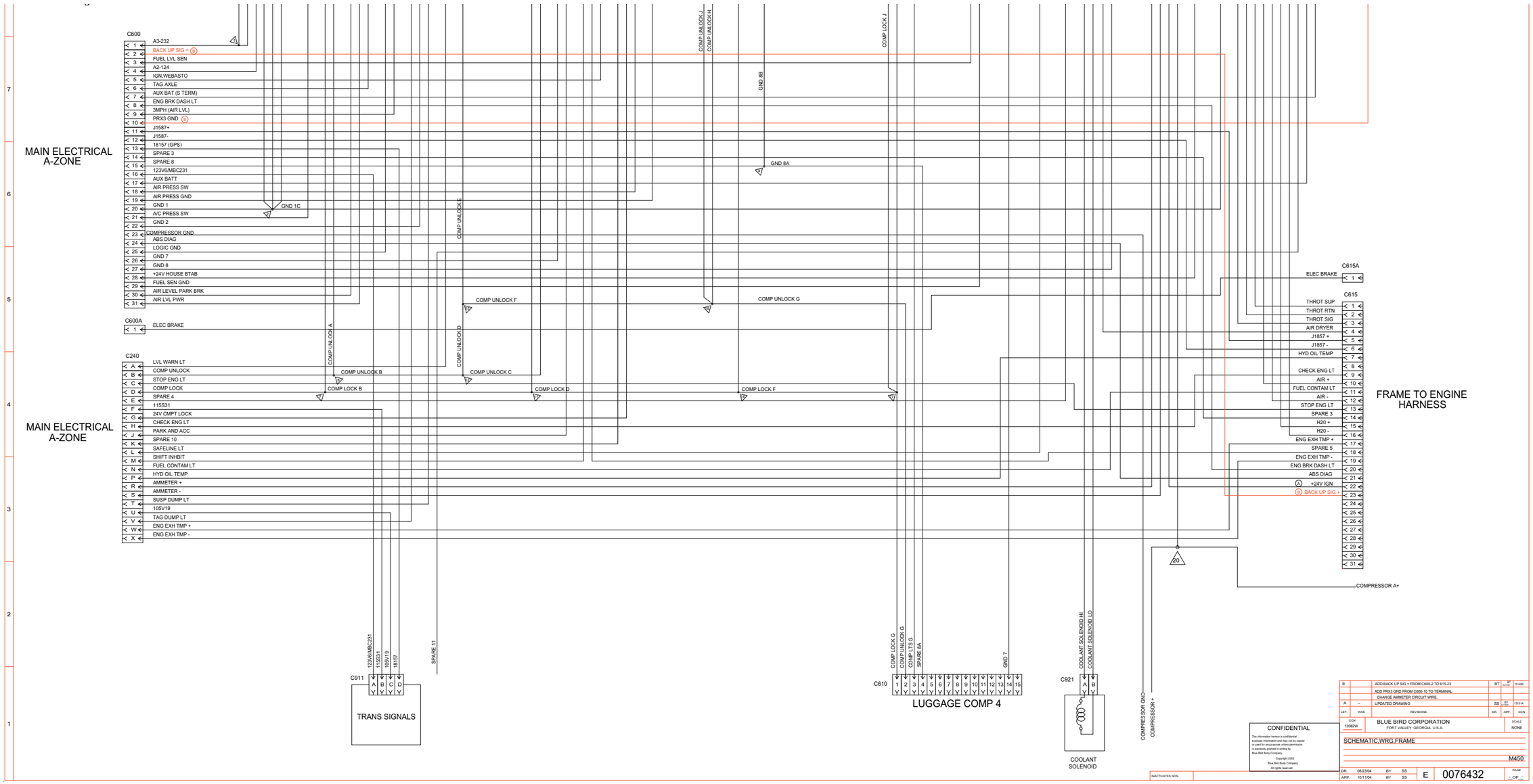

Wiring Schematic 0084640 - Tow Plug Harness Wrg

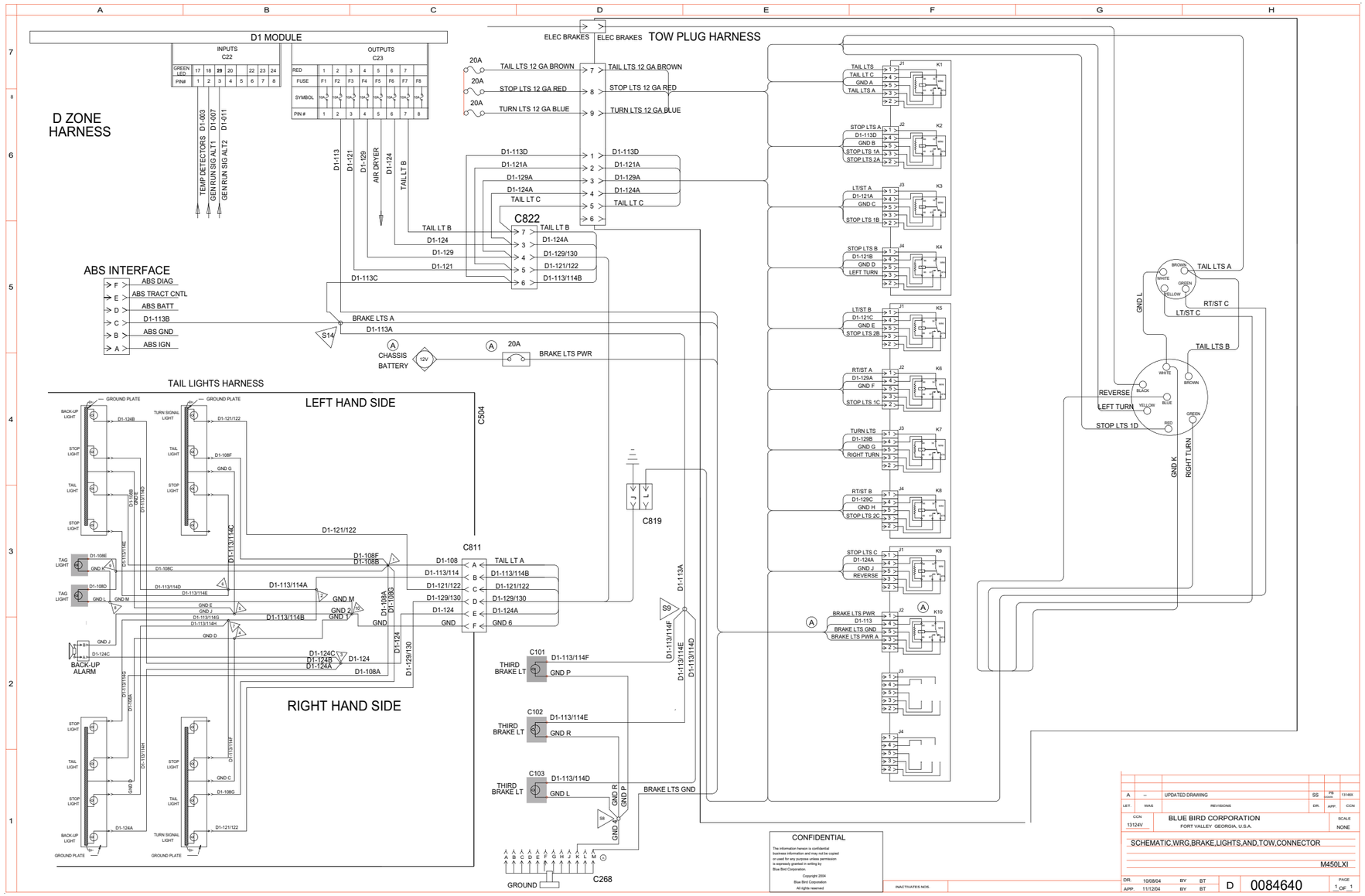

Wiring Schematic 0084640 - Tow Plug Harness Wrg - **Exploded View A**

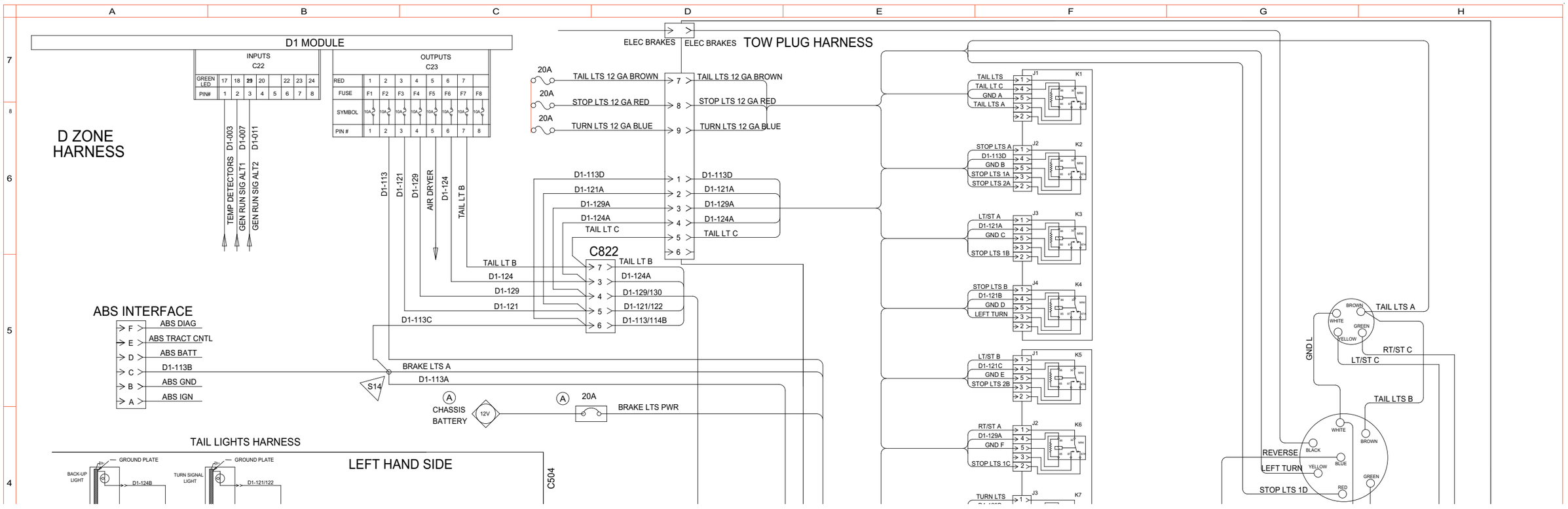

Wiring Schematic 0084640 - Tow Plug Harness Wrg - **Exploded View B**

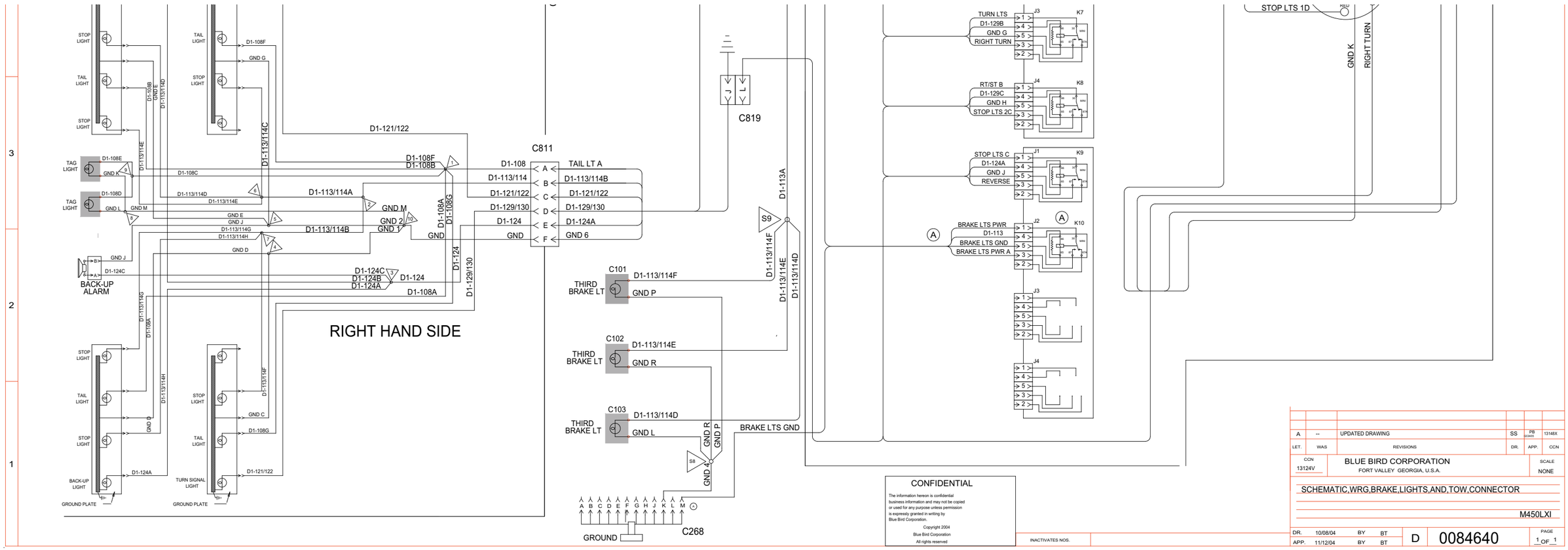

Wiring Schematic 0076577 - Rear PDU Interface

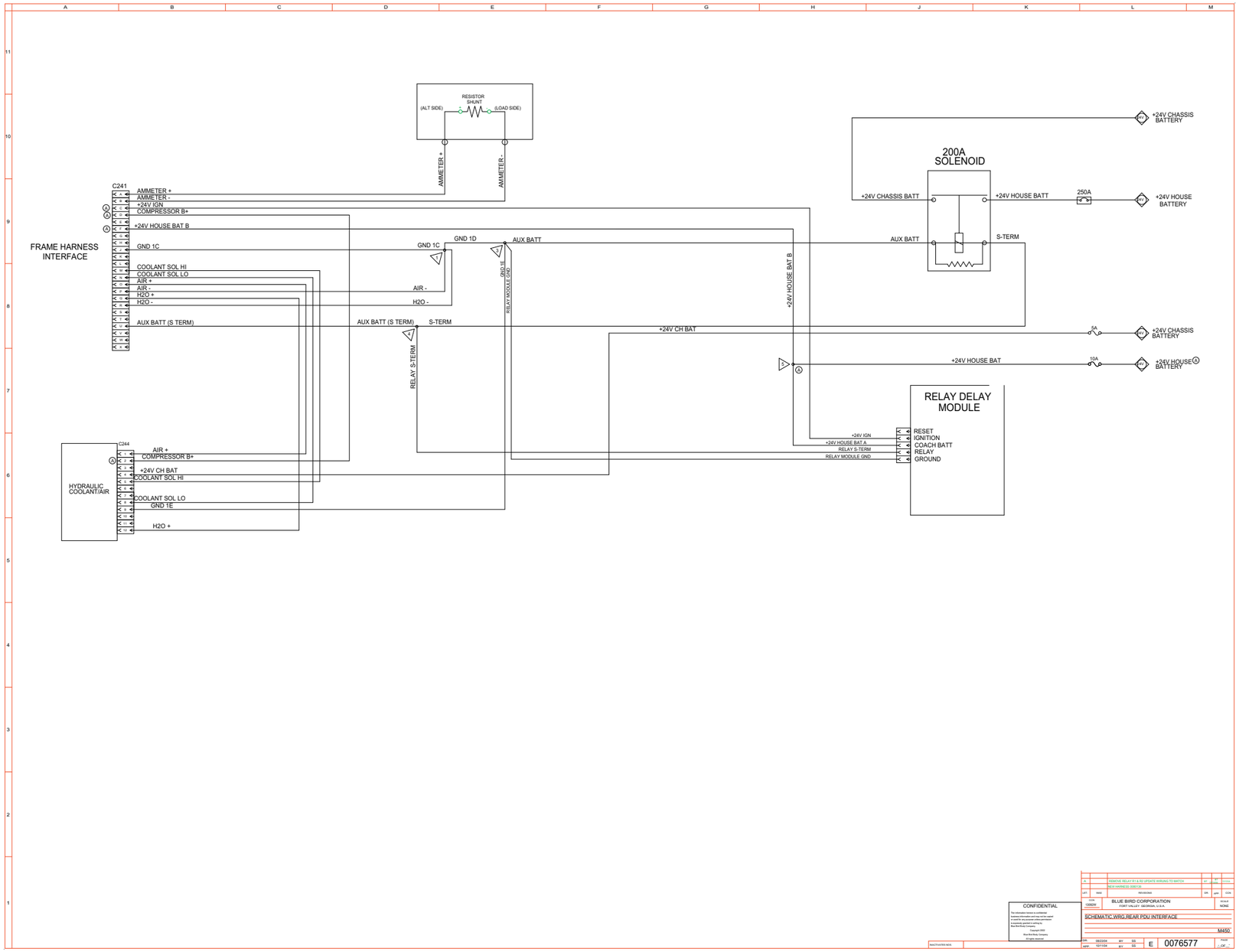

Wiring Schematic 0082390 - D-Zone

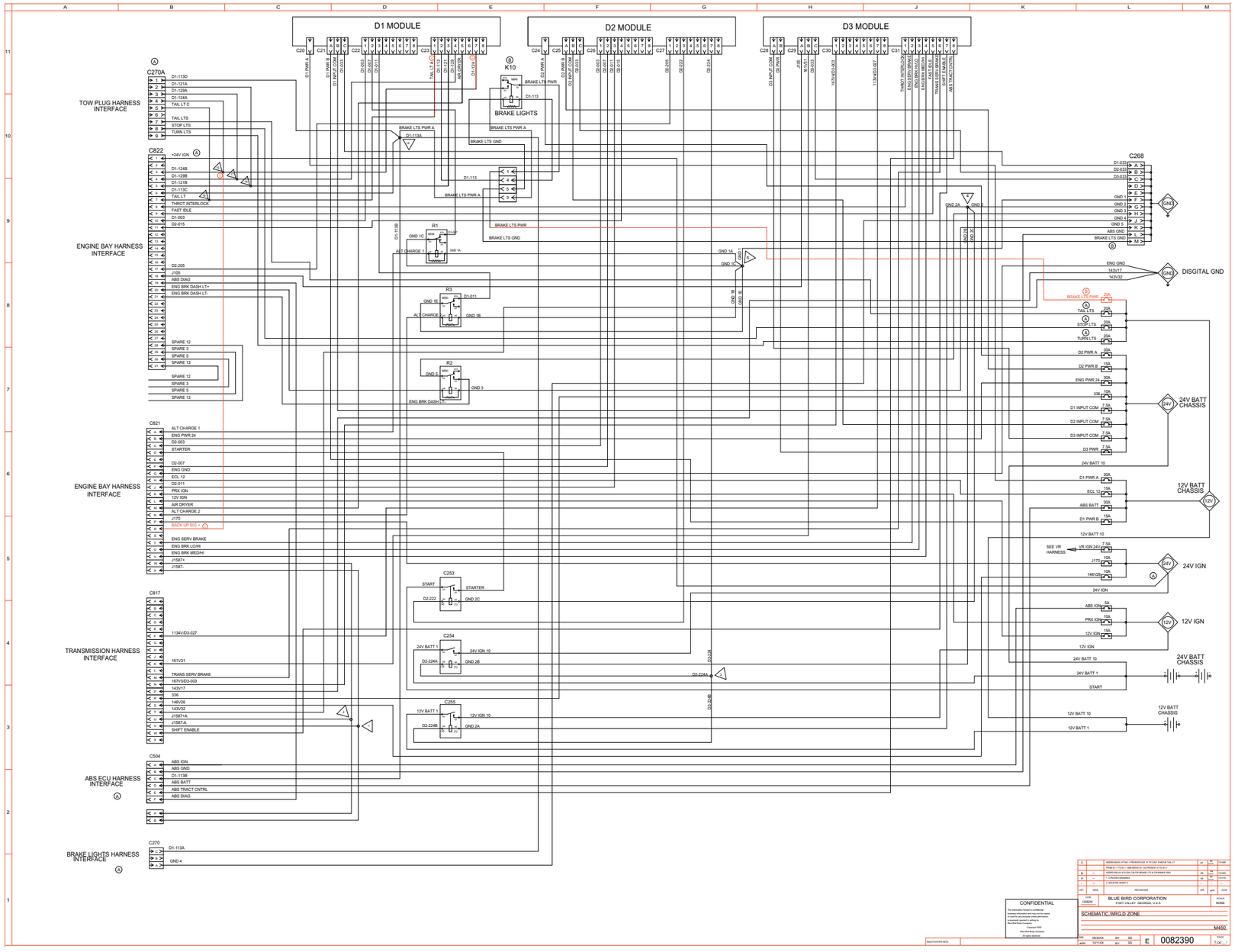

Wiring Schematic 0082390 - D-Zone - **Exploded View A**

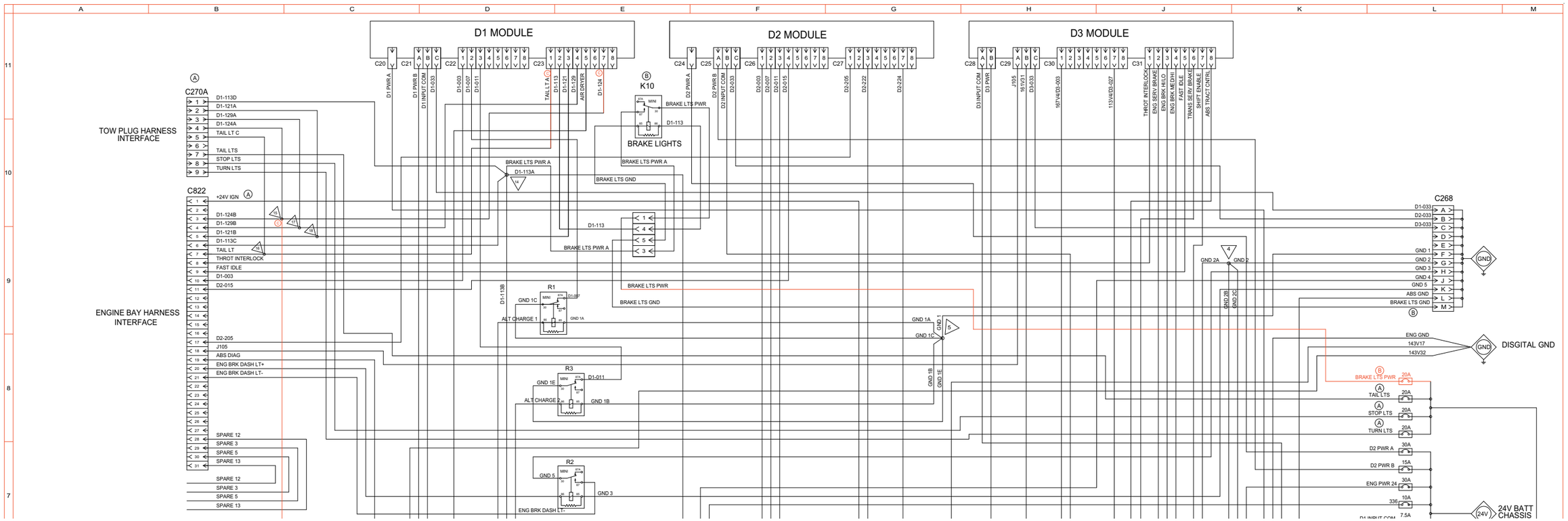

Wiring Schematic 0082390 - D-Zone - **Exploded View B**

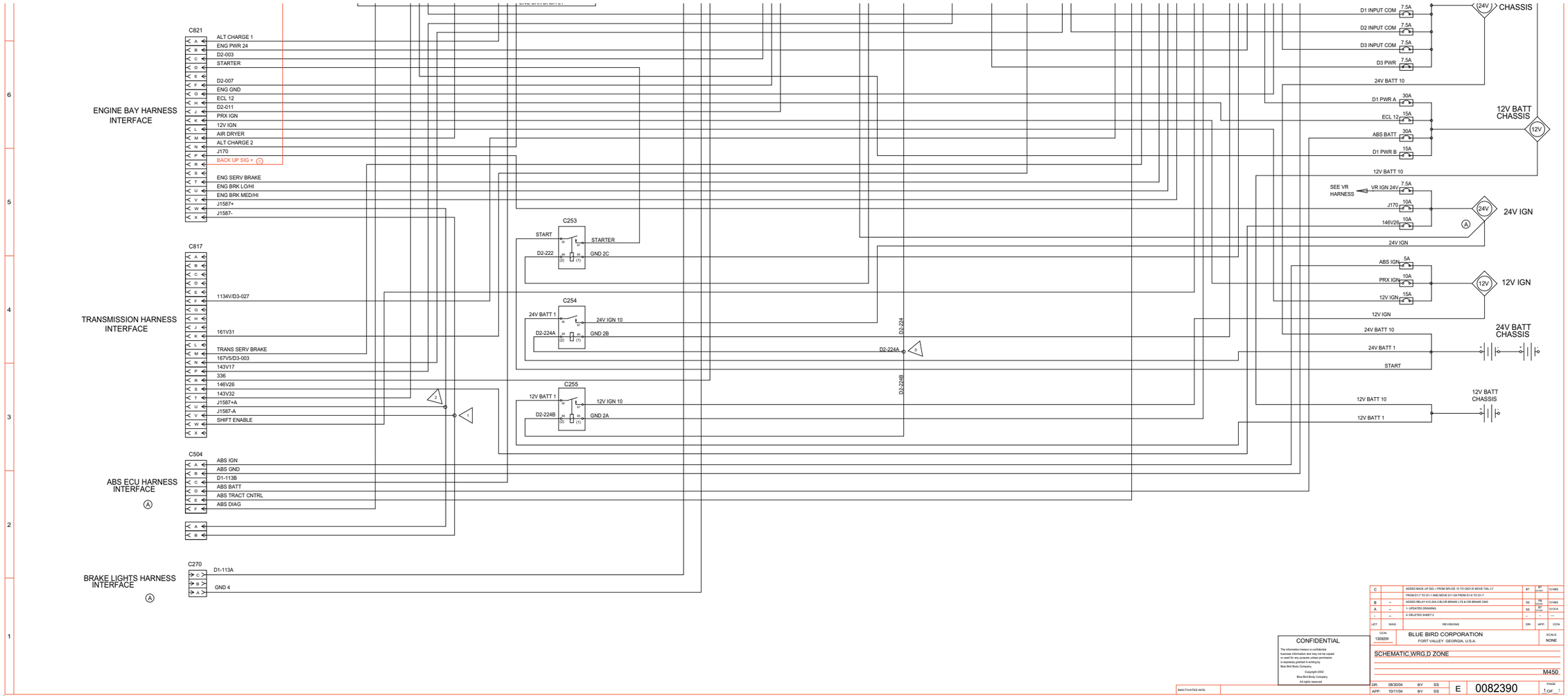

Wiring Schematic 0076434 - Engine, C13

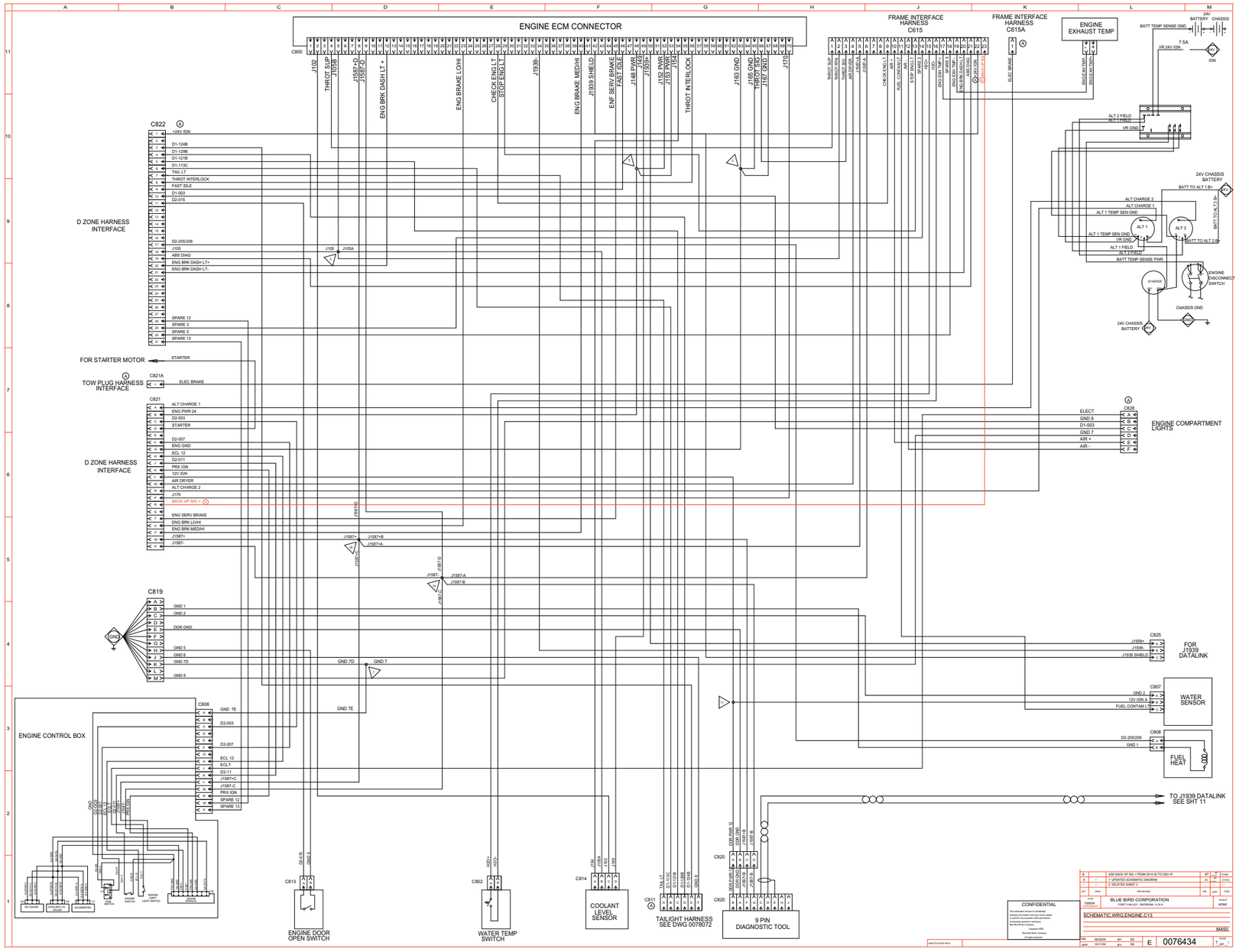

Wiring Schematic 0076434 - **Exploded View A**

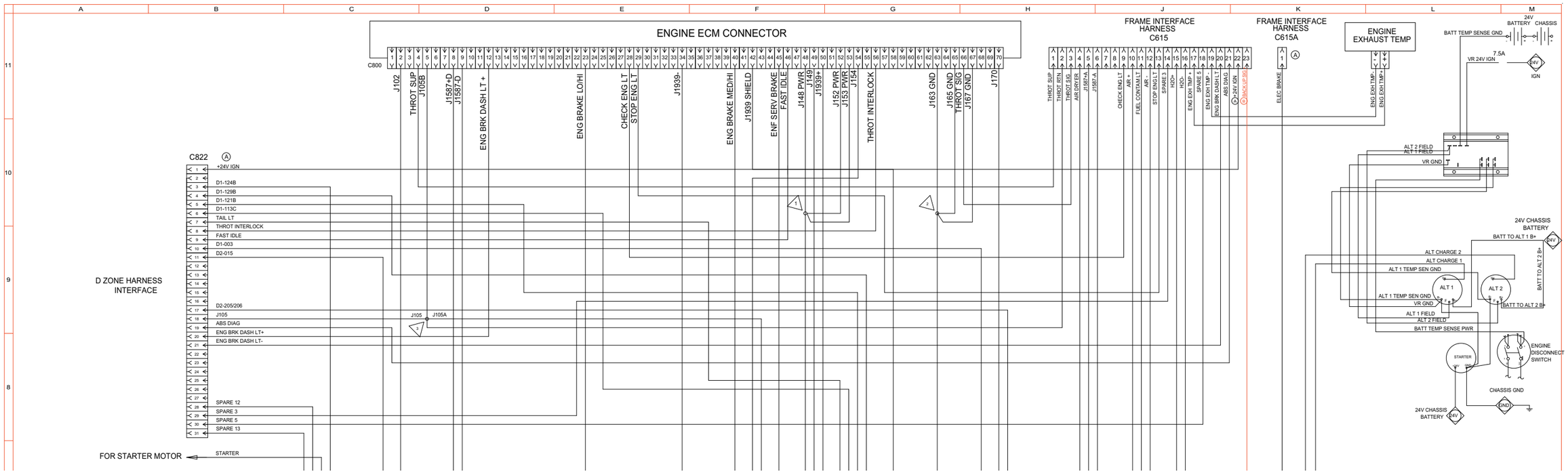

Wiring Schematic 0076434 - Engine, C13 - **Exploded View B**

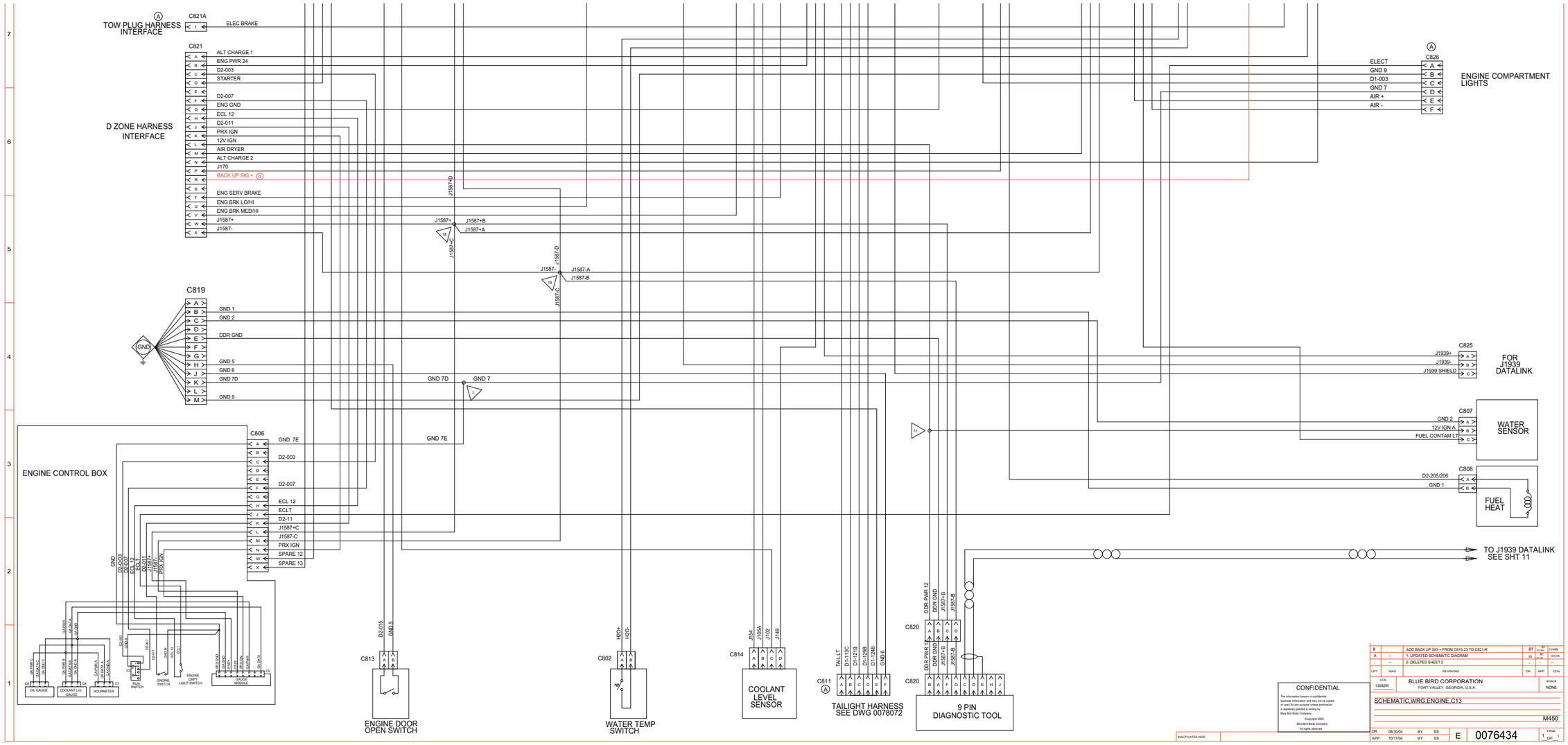

Wiring Schematic 0086799 - Front, Body_Page 1 of 2

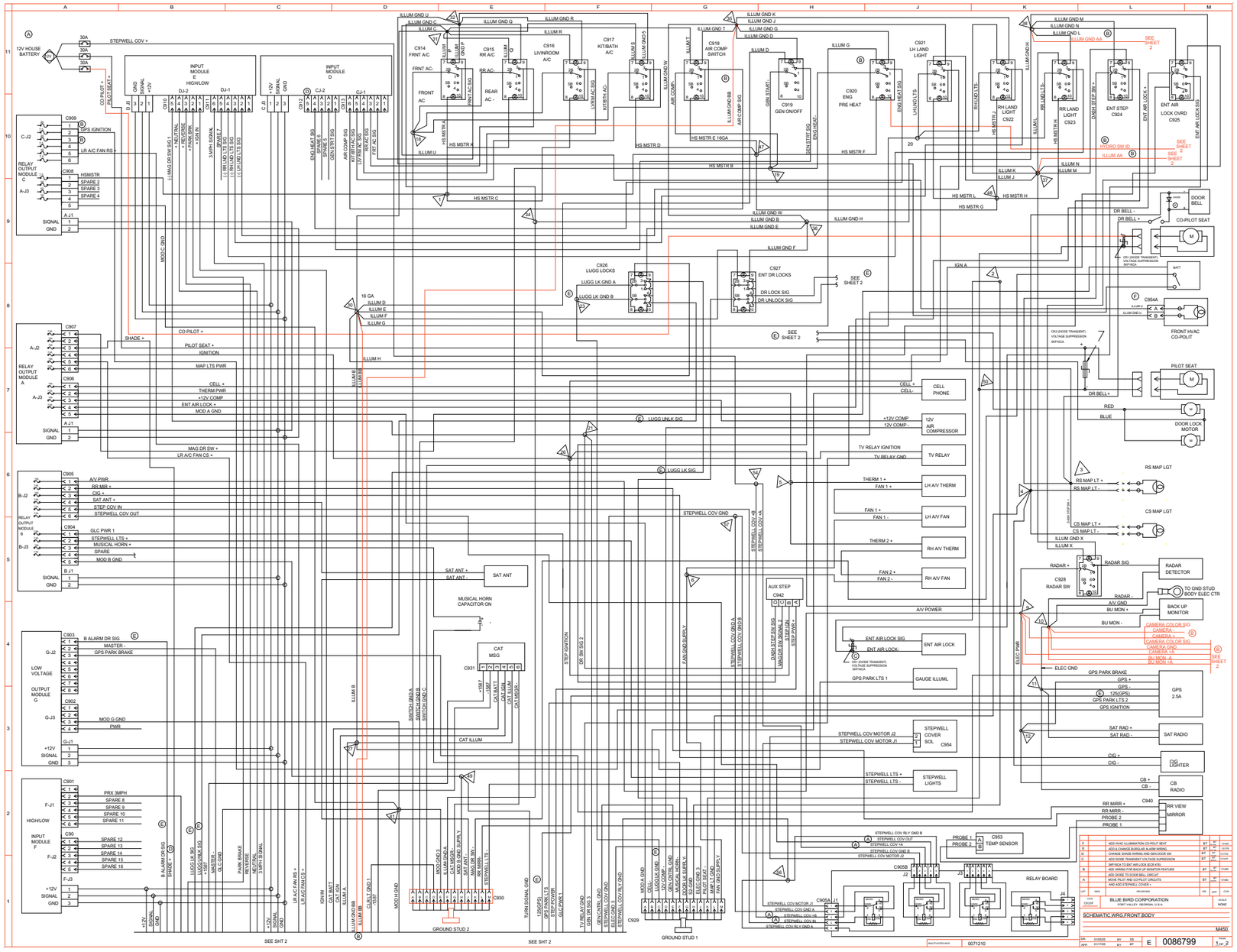

Wiring Schematic 0086799 - Front, Body_Page 1 of 2 - **Exploded View A**

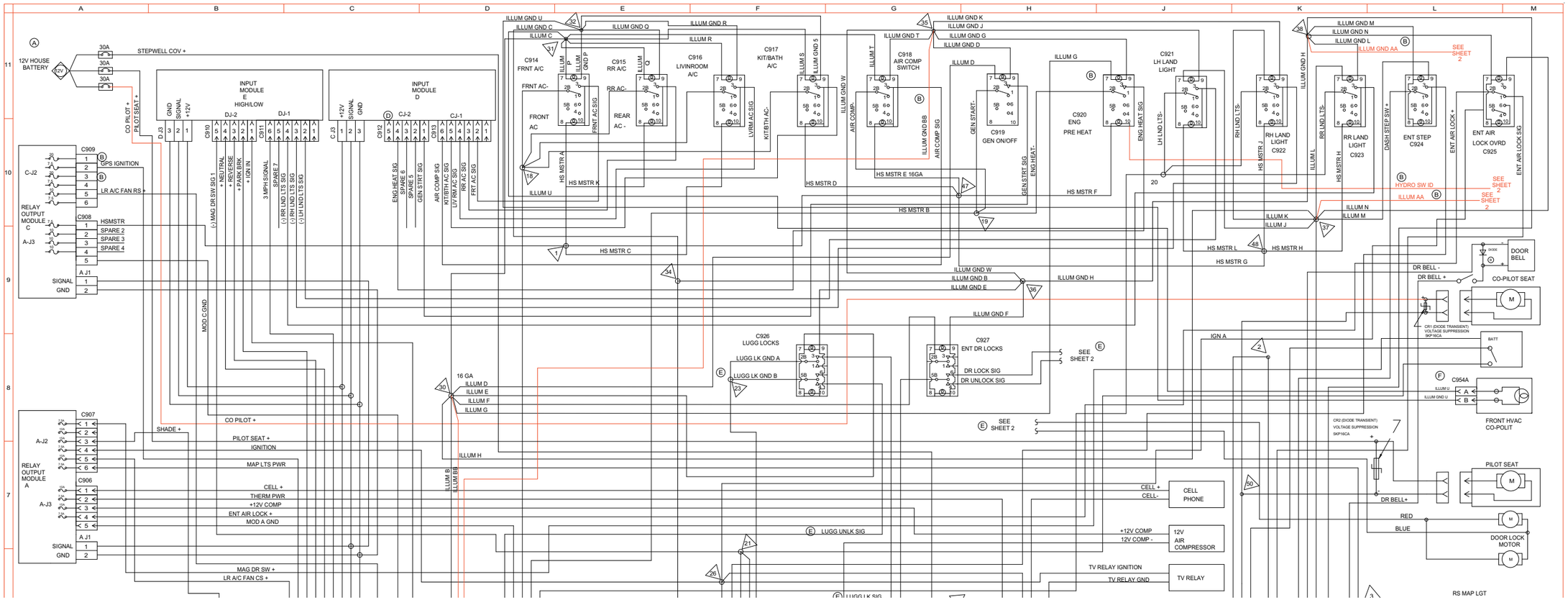

Wiring Schematic 0086799 - Front, Body_Page 1 of 2 - **Exploded View B**

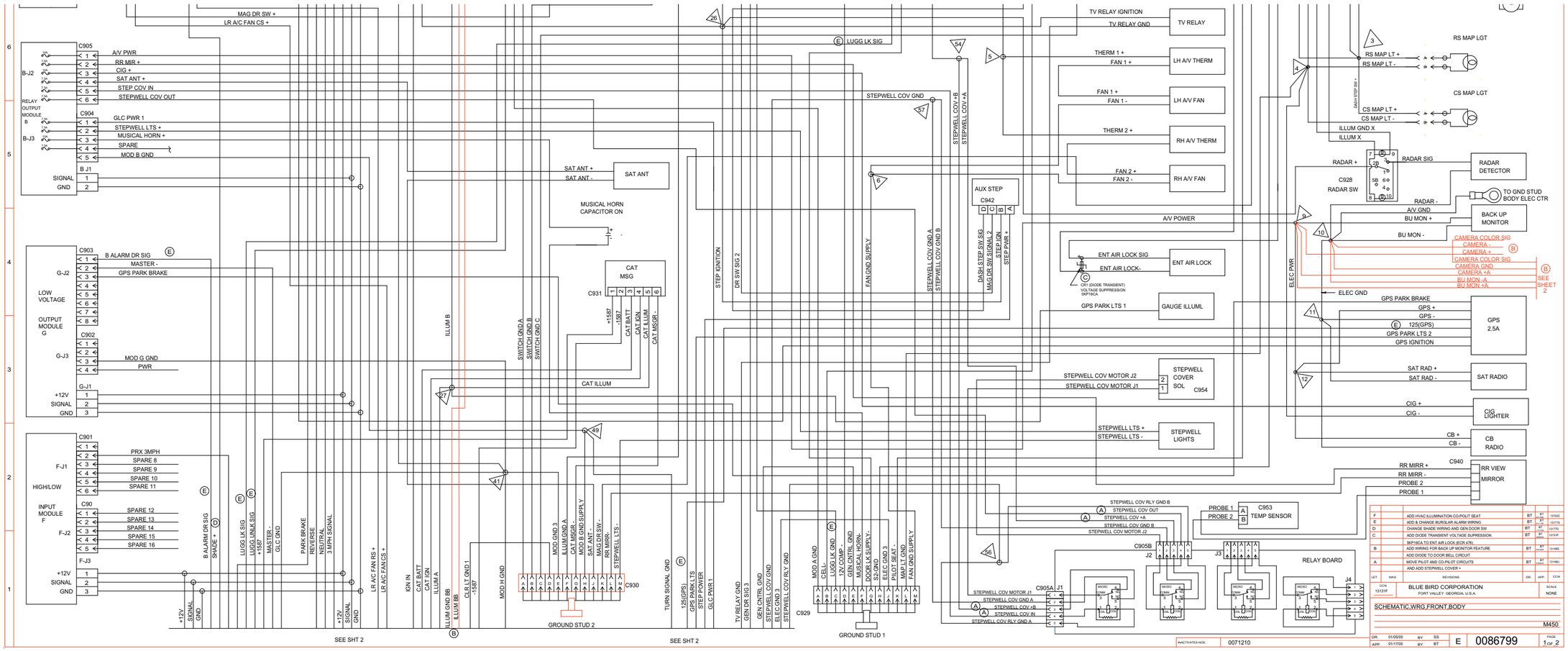

Wiring Schematic 0086799 - Front, Body_Page 2 of 2

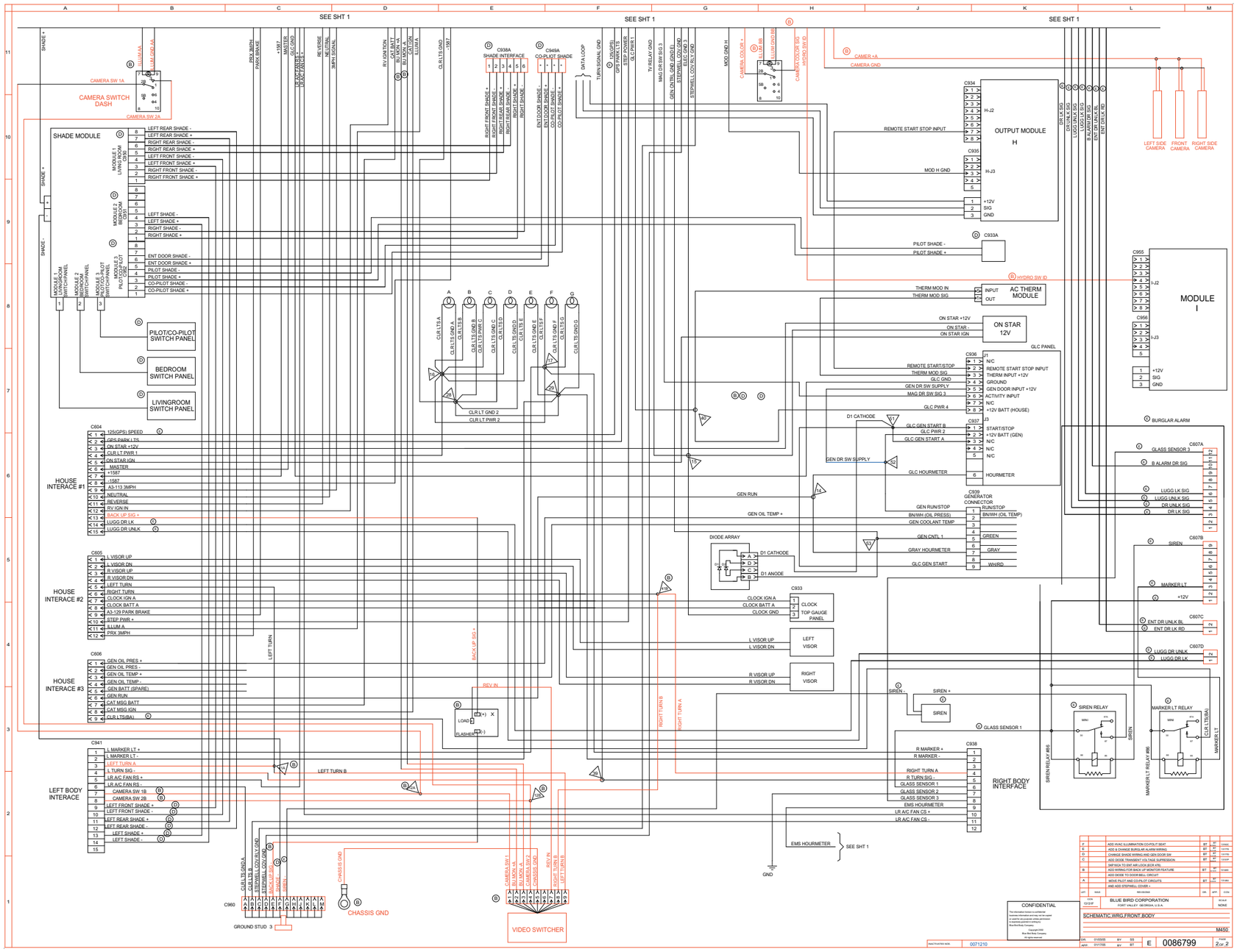

Wiring Schematic 0086799 - Front, Body_Page 2 of 2 - **Exploded View A**

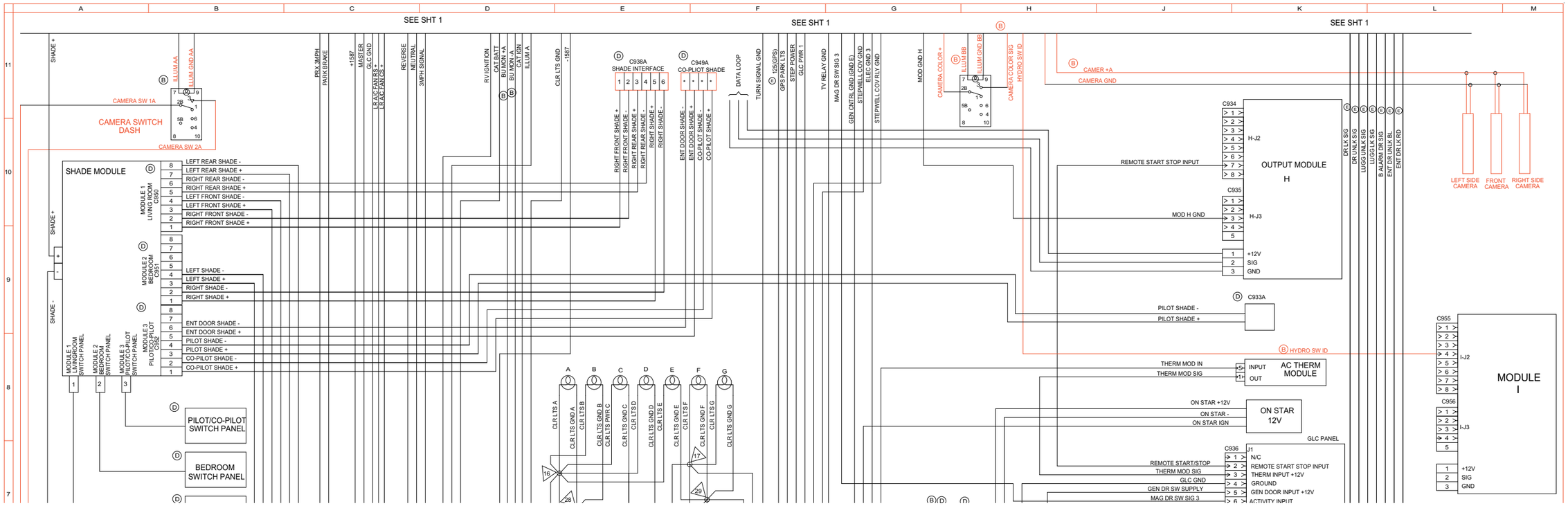

Wiring Schematic 0086799 - Front, Body_Page 2 of 2 - **Exploded View B**

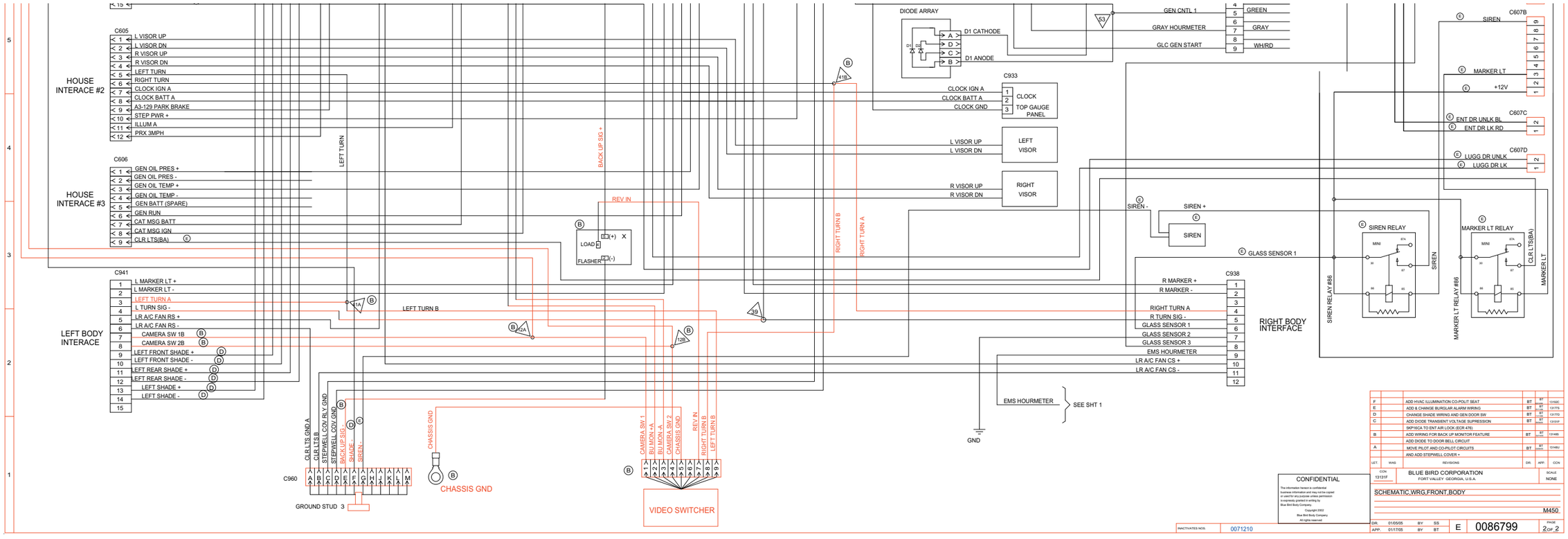

Wiring Schematic 0076506 - Datalink

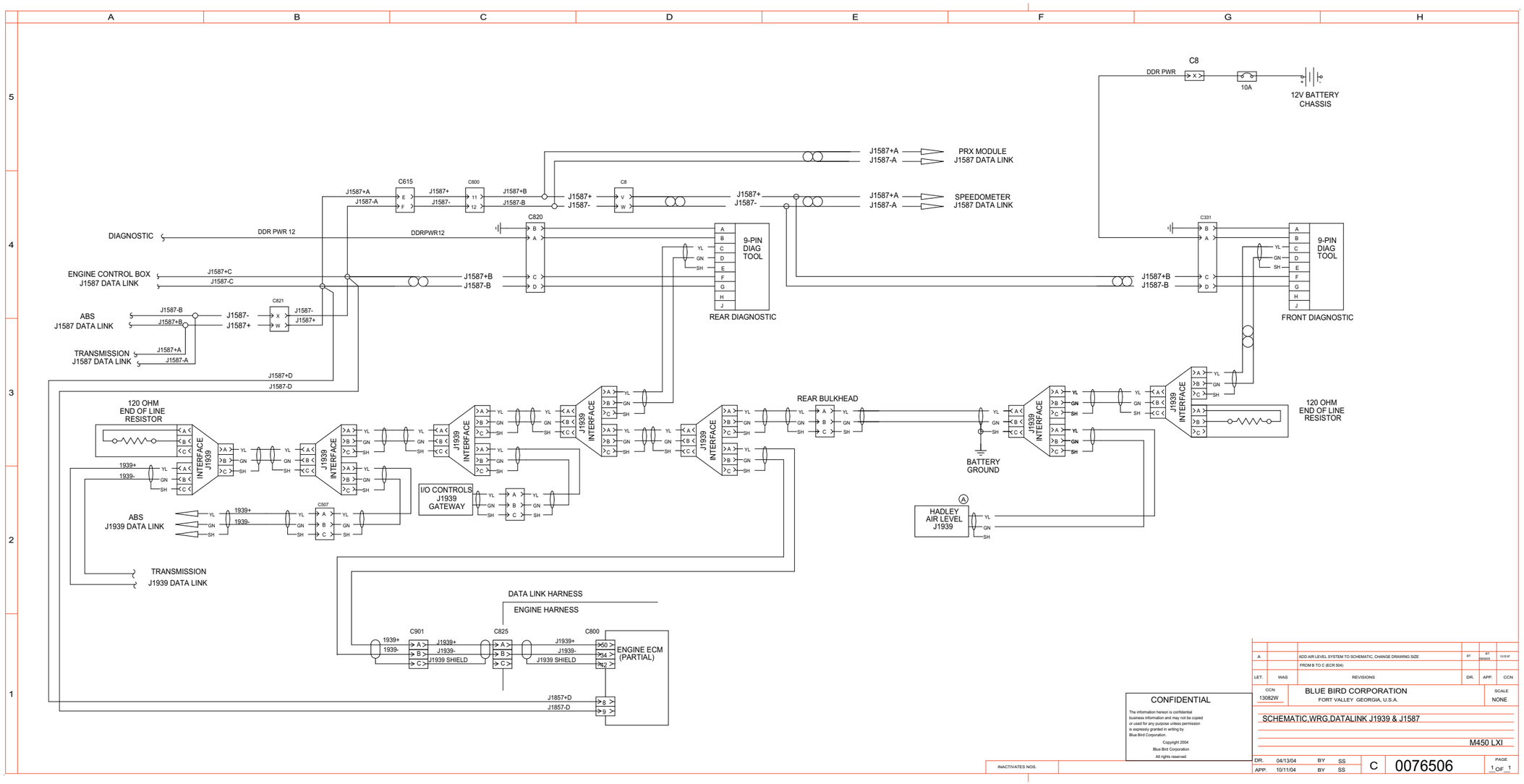

Wiring Schematic 0075796 - Living Room, Bedroom, C/S

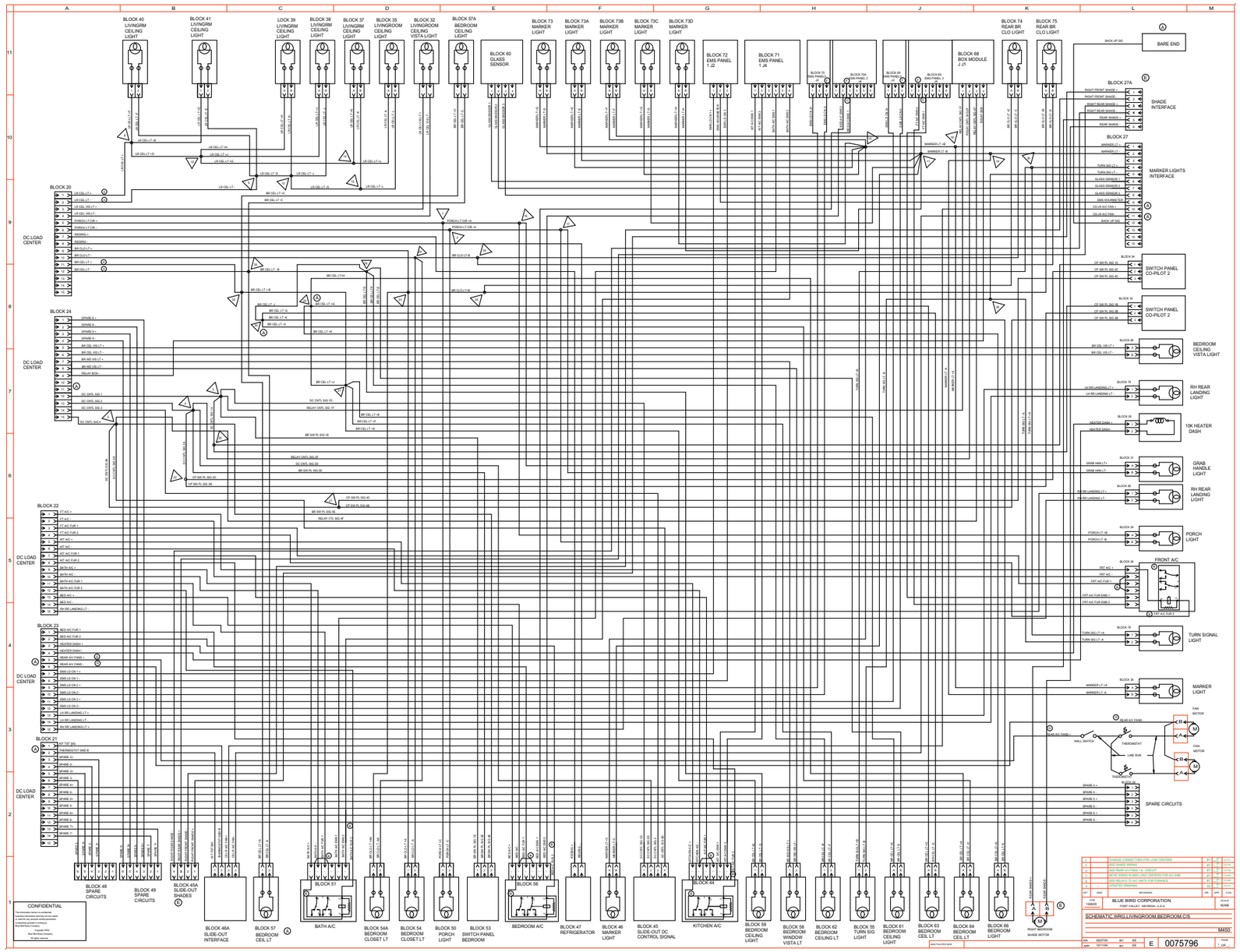

Wiring Schematic 0100164 - Living Room, Bedroom, R/S

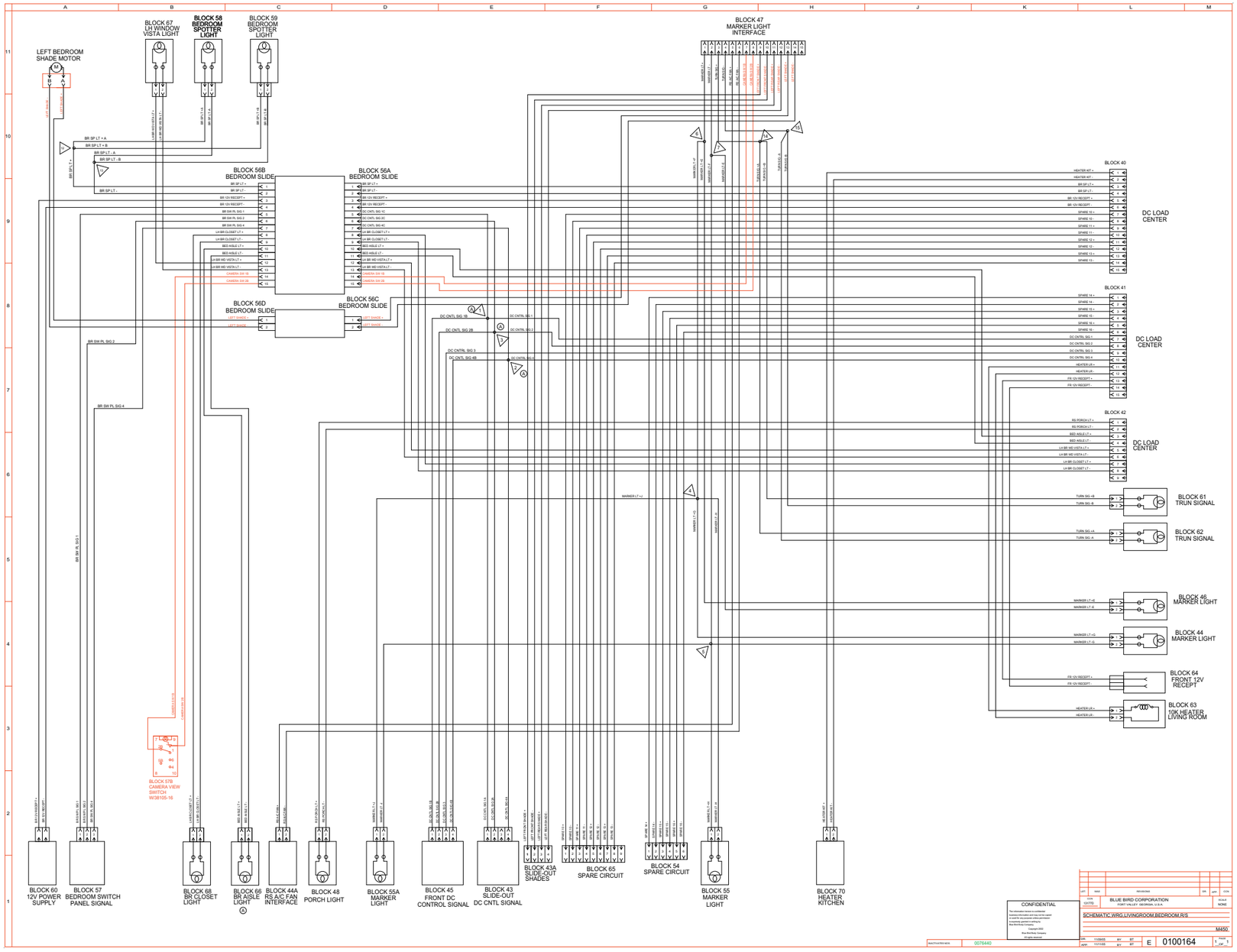

Wiring Schematic 0100164 - Living Room, Bedroom, R/S - **Exploded View A**

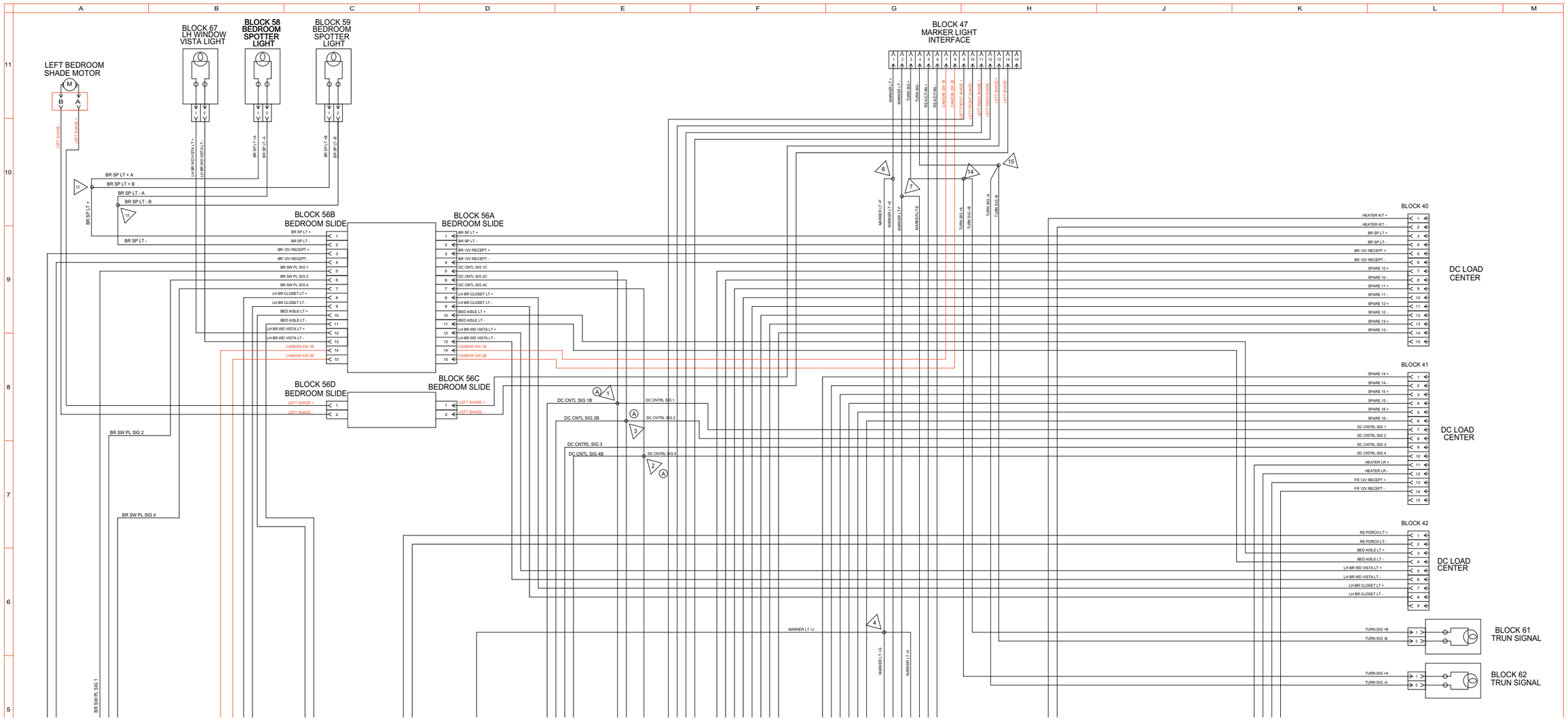

Wiring Schematic 0100164 - Living Room, Bedroom, R/S - **Exploded View B**

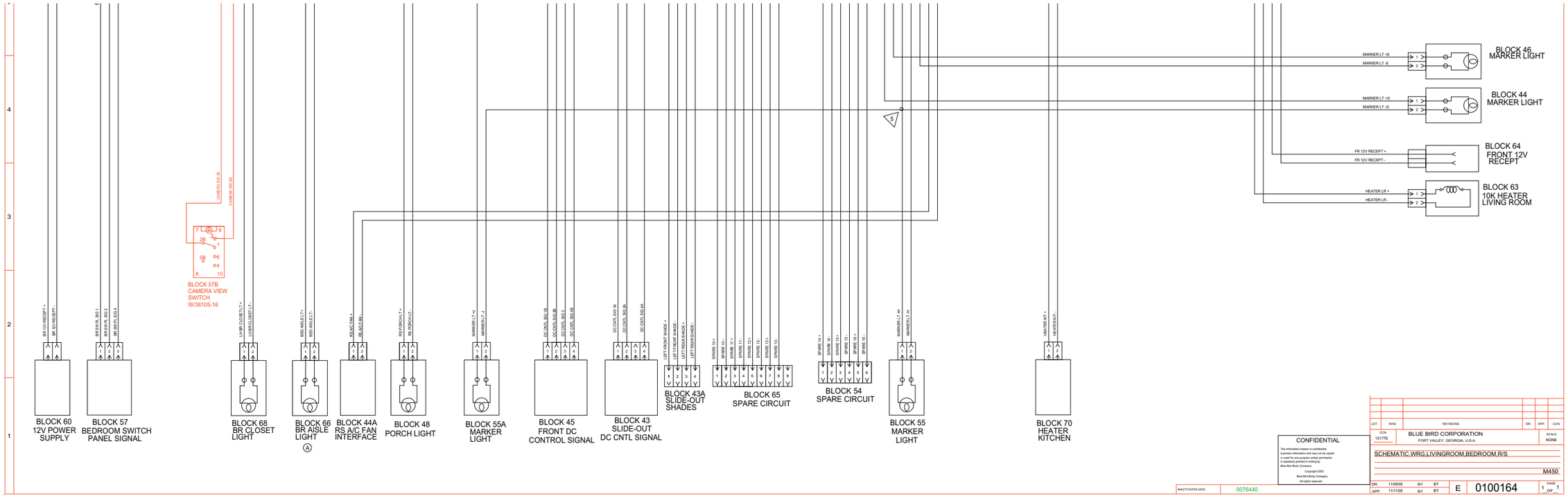

Wiring Schematic 0081856 - Living/Dining Room, Slide-Out, Bath Floorplan A

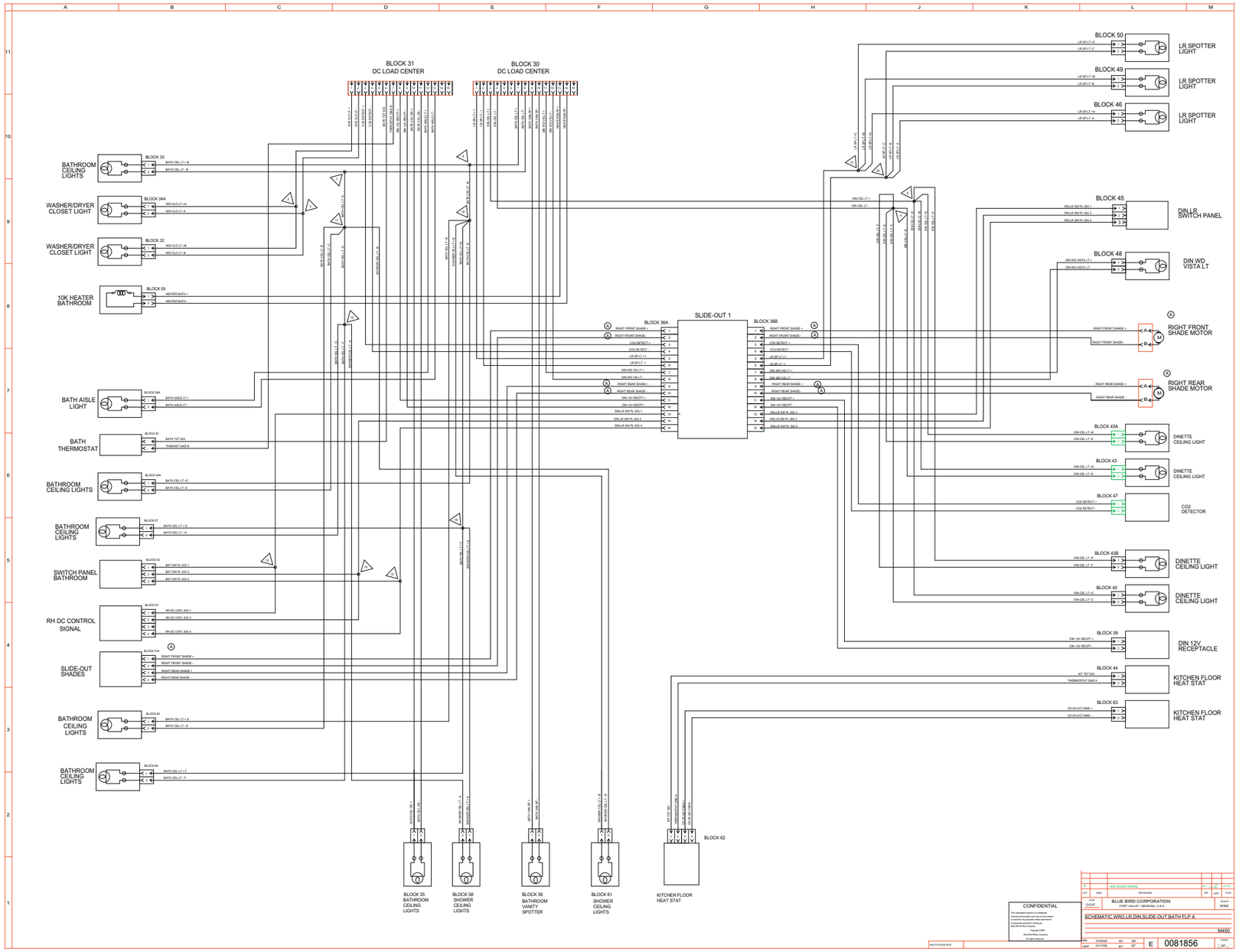

Wiring Schematic 0081856 - Living/Dining Room, Slide-Out, Bath Floorplan A - **Exploded View A**

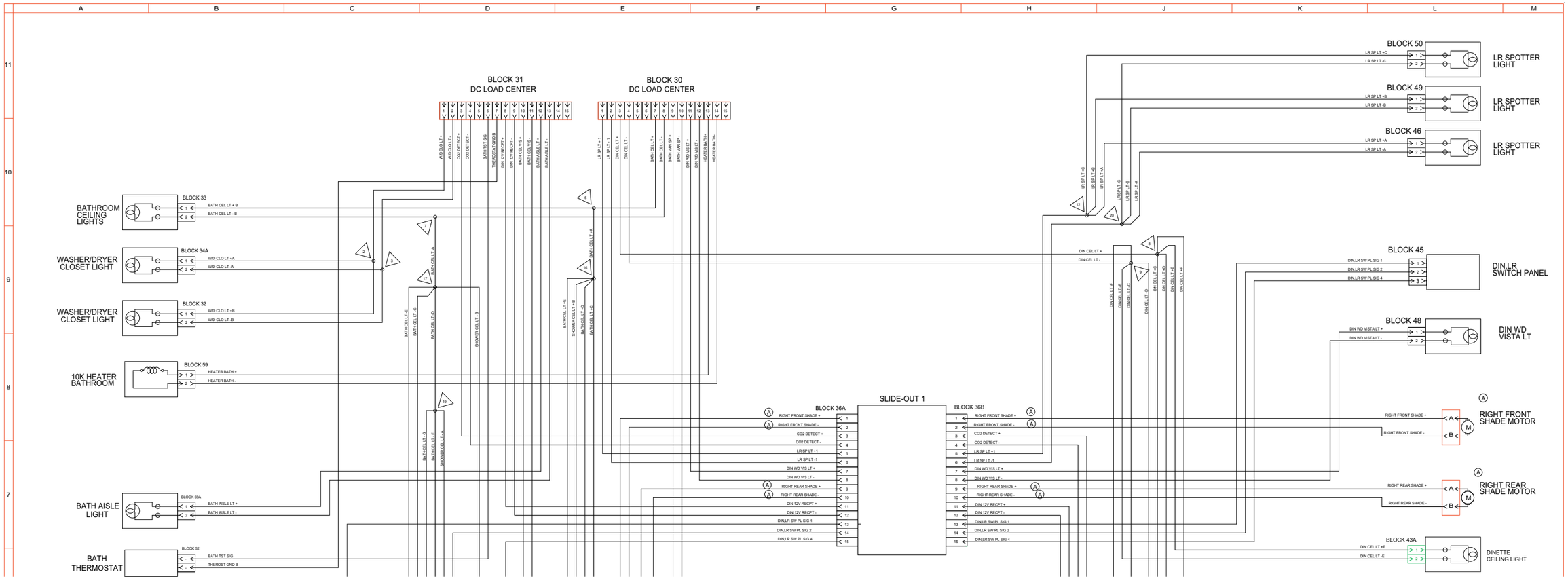

Wiring Schematic 0081856 - Living/Dining Room, Slide-Out, Bath Floorplan A - **Exploded View B**

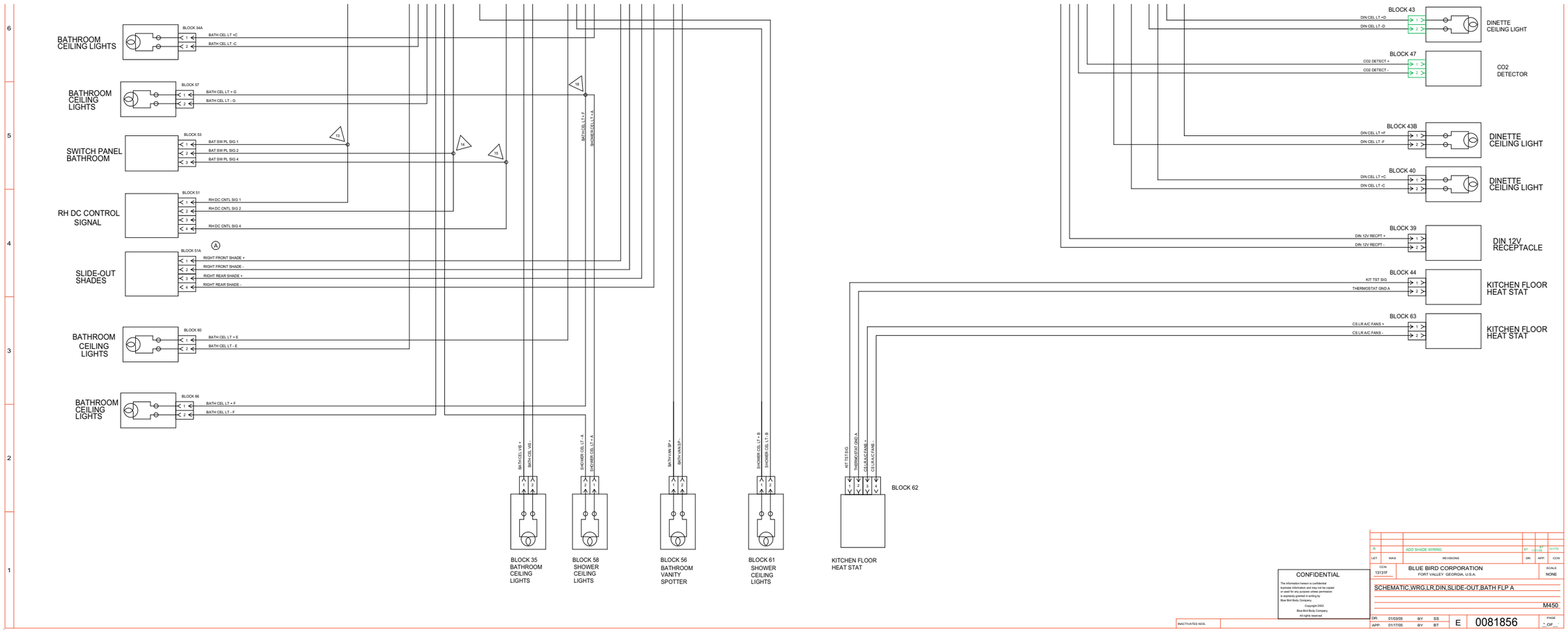

Wiring Schematic 0086740 - Living/Dining Room, Slide-Out, Bath Floorplan B

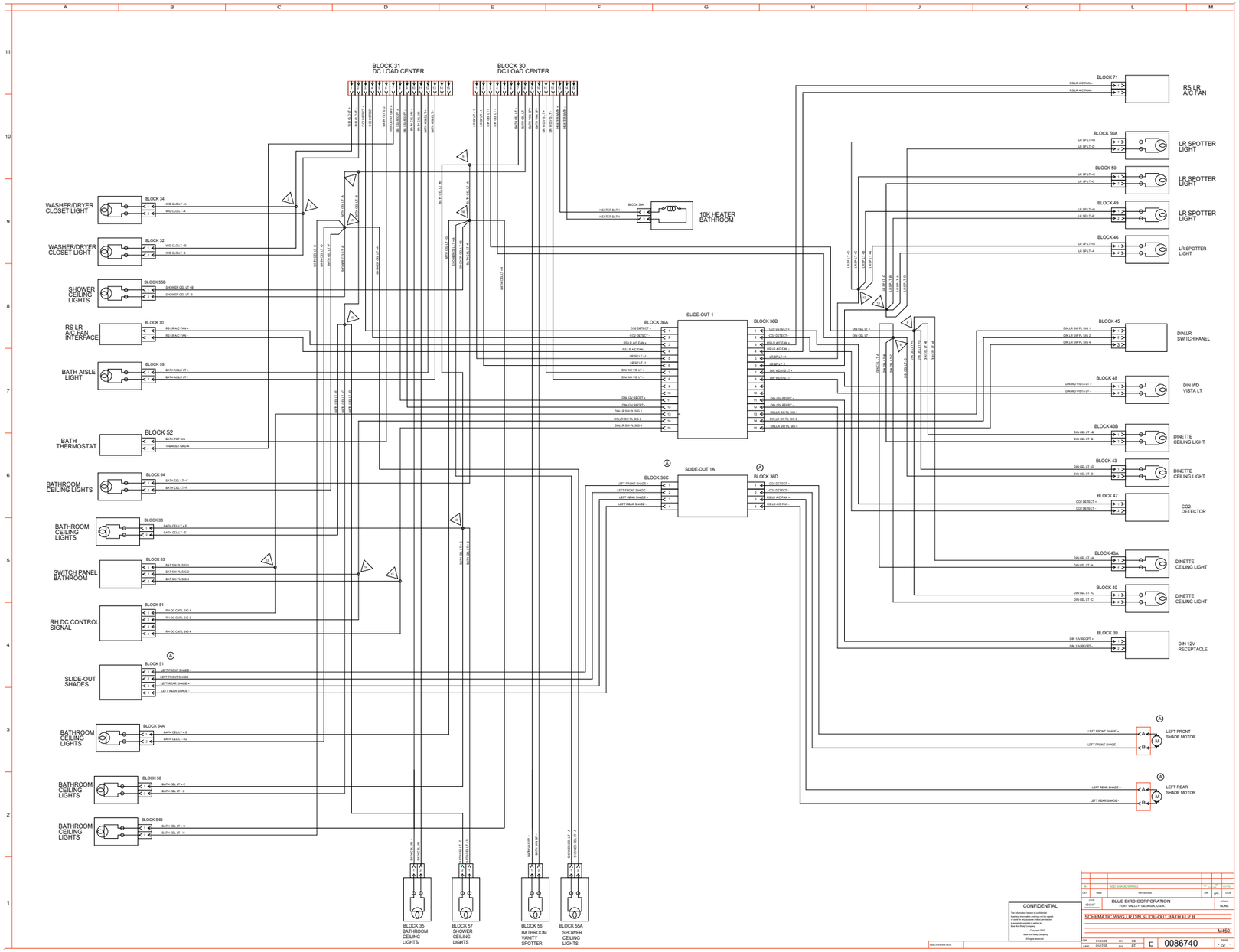

Wiring Schematic 0086740 - Living/Dining Room, Slide-Out, Bath Floorplan B - **Exploded View A**

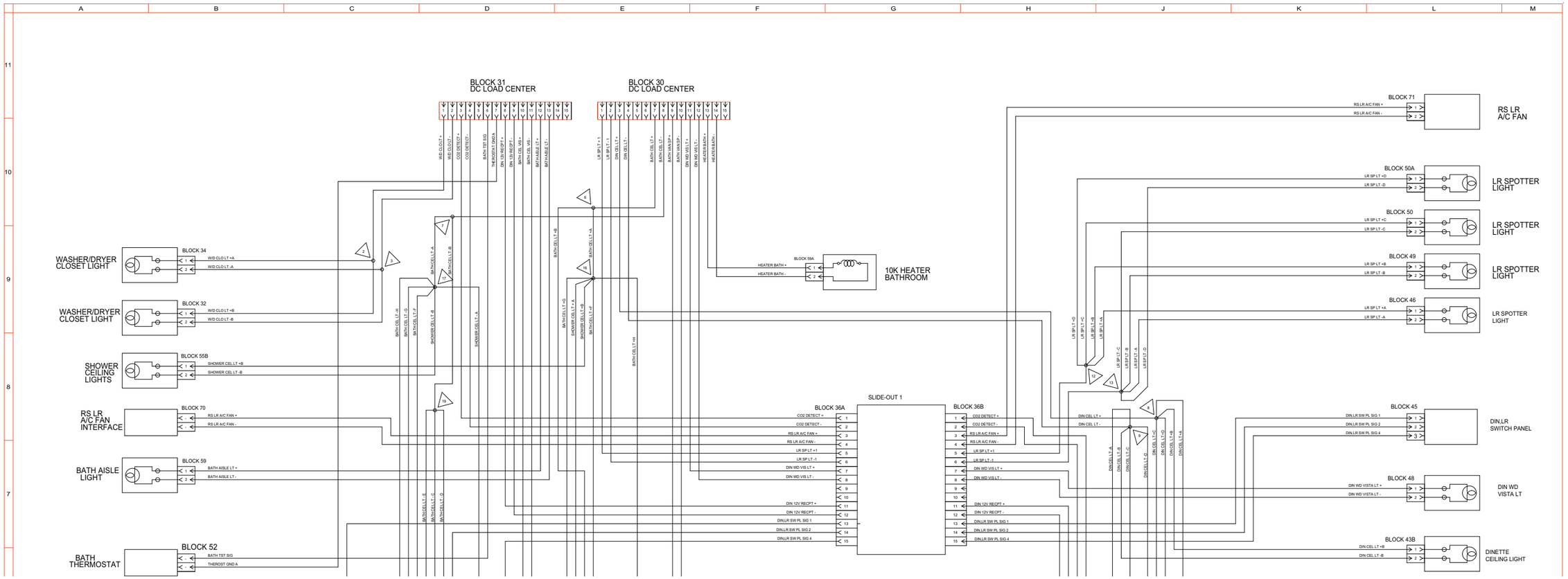

Wiring Schematic 0086740 - Living/Dining Room, Slide-Out, Bath Floorplan B - **Exploded View B**

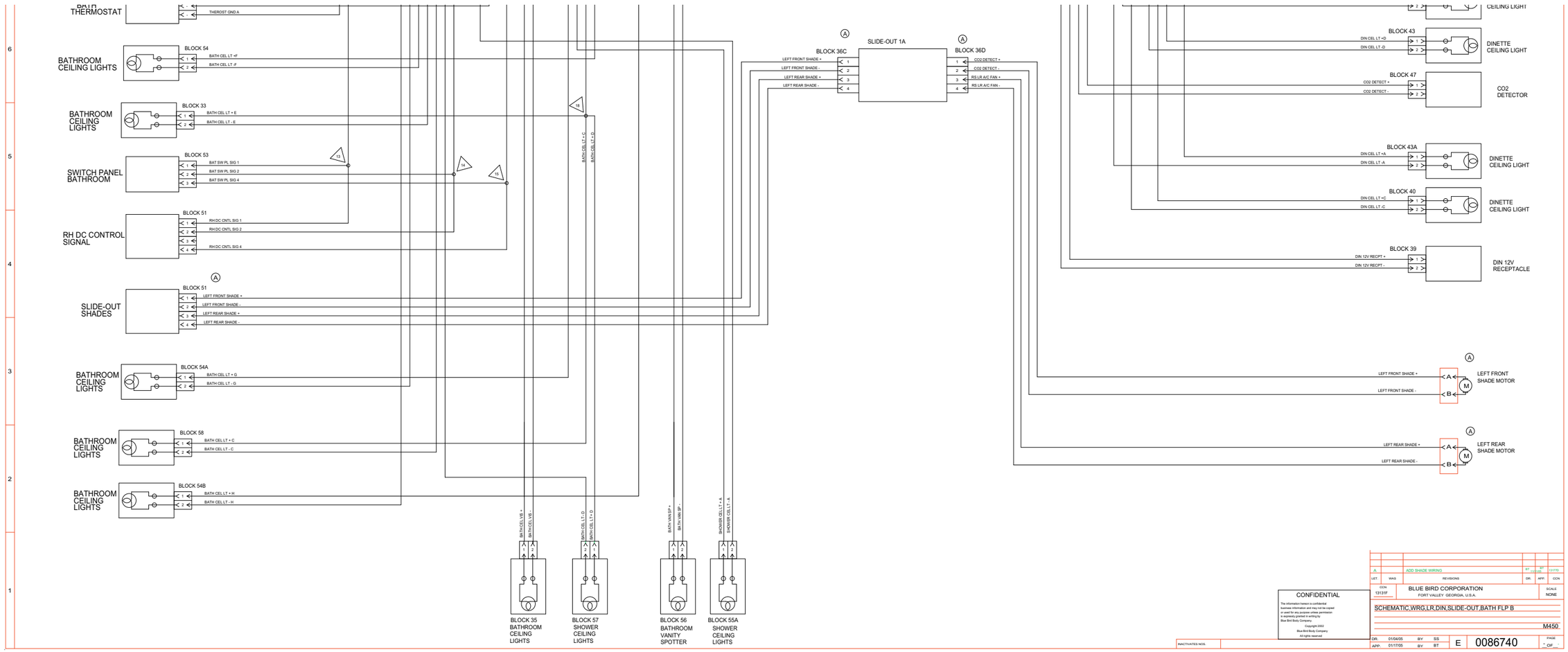

Wiring Schematic 0076147 - Bay, DC, Load Center - Page 1 of 2

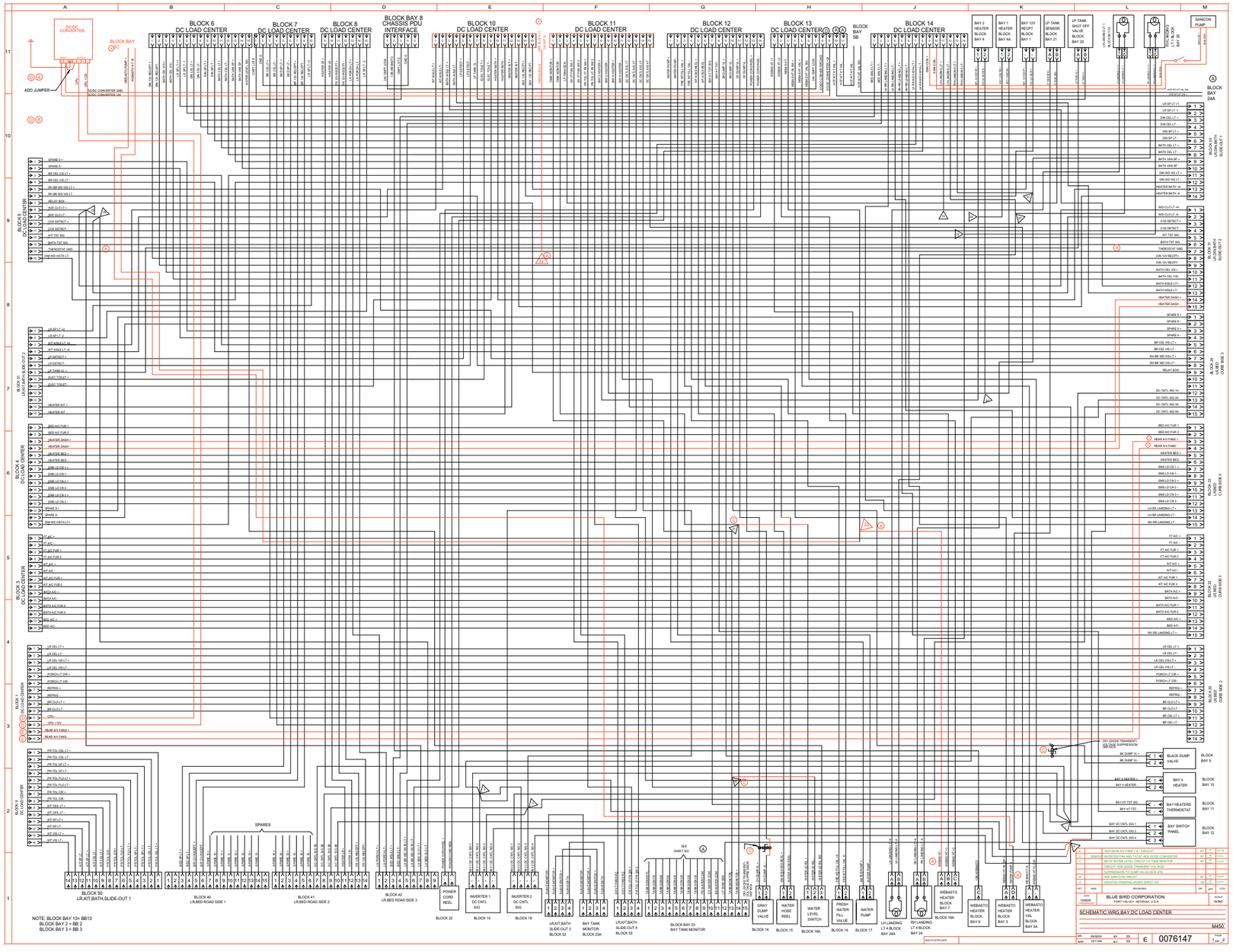

Wiring Schematic 0076147 - Bay, DC, Load Center - Page 1 of 2 - **Exploded View A**

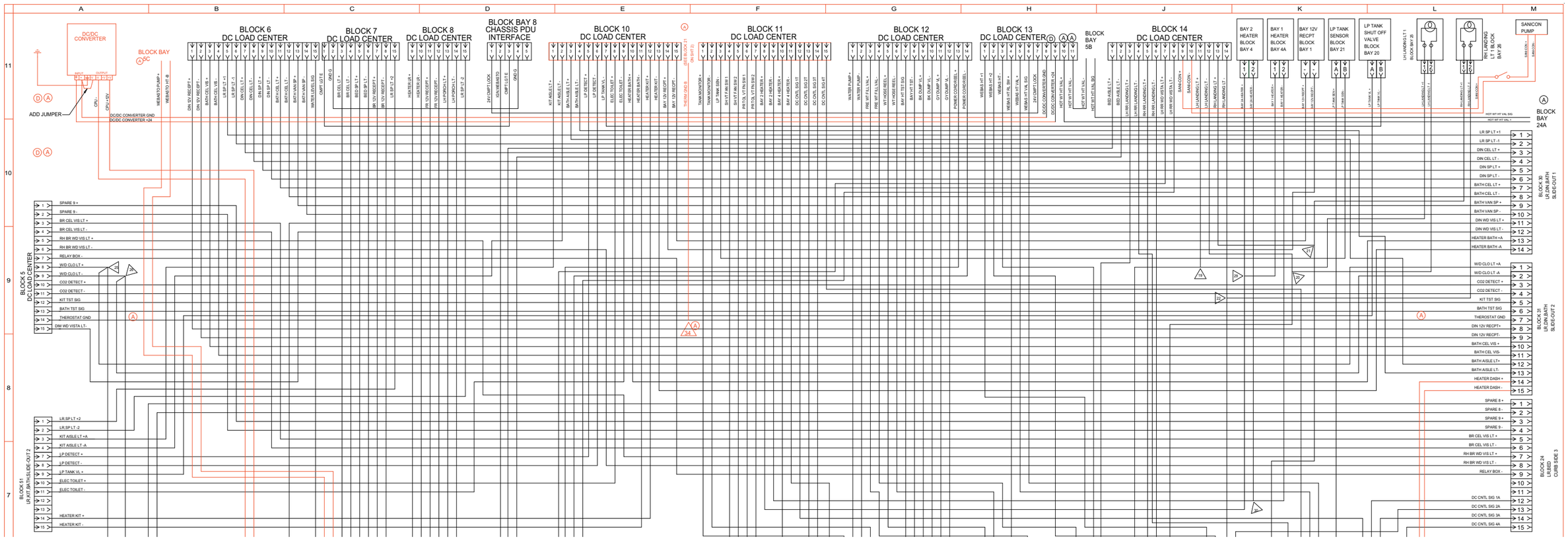

Wiring Schematic 0076147 - Bay, DC, Load Center - Page 1 of 2 - **Exploded View B**

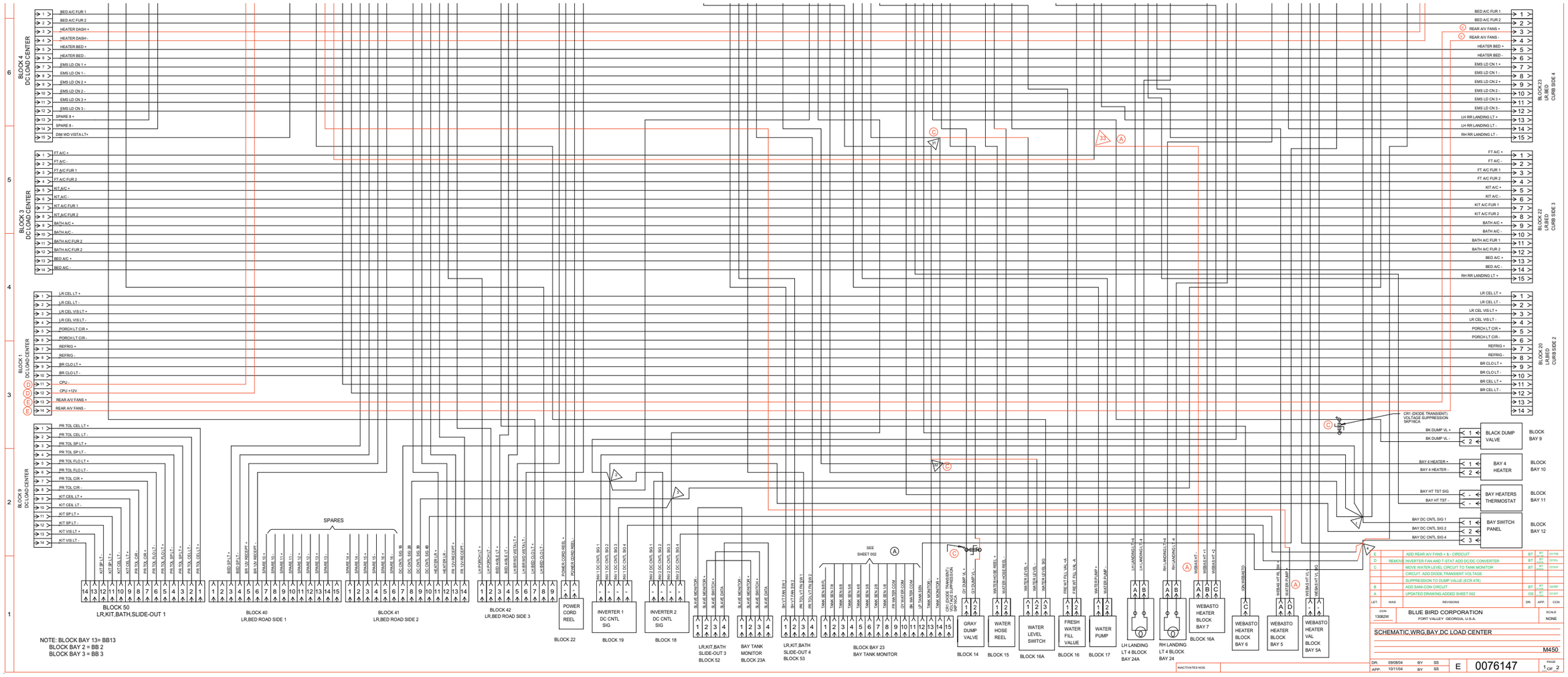

Wiring Schematic 0076147 - Bay, DC, Load Center - Page 2 of 2

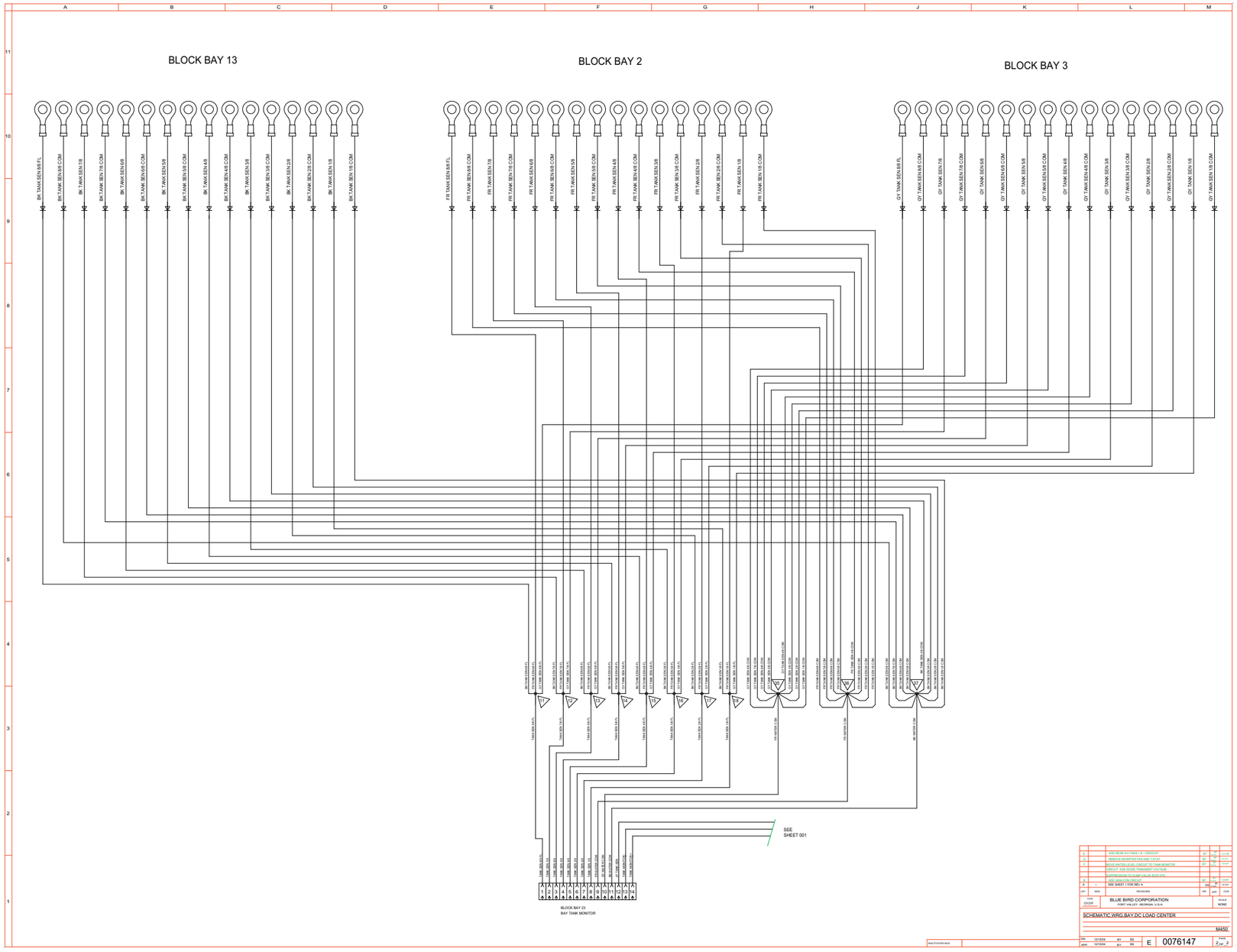

Wiring Schematic 0076203 - Bay Multiplex

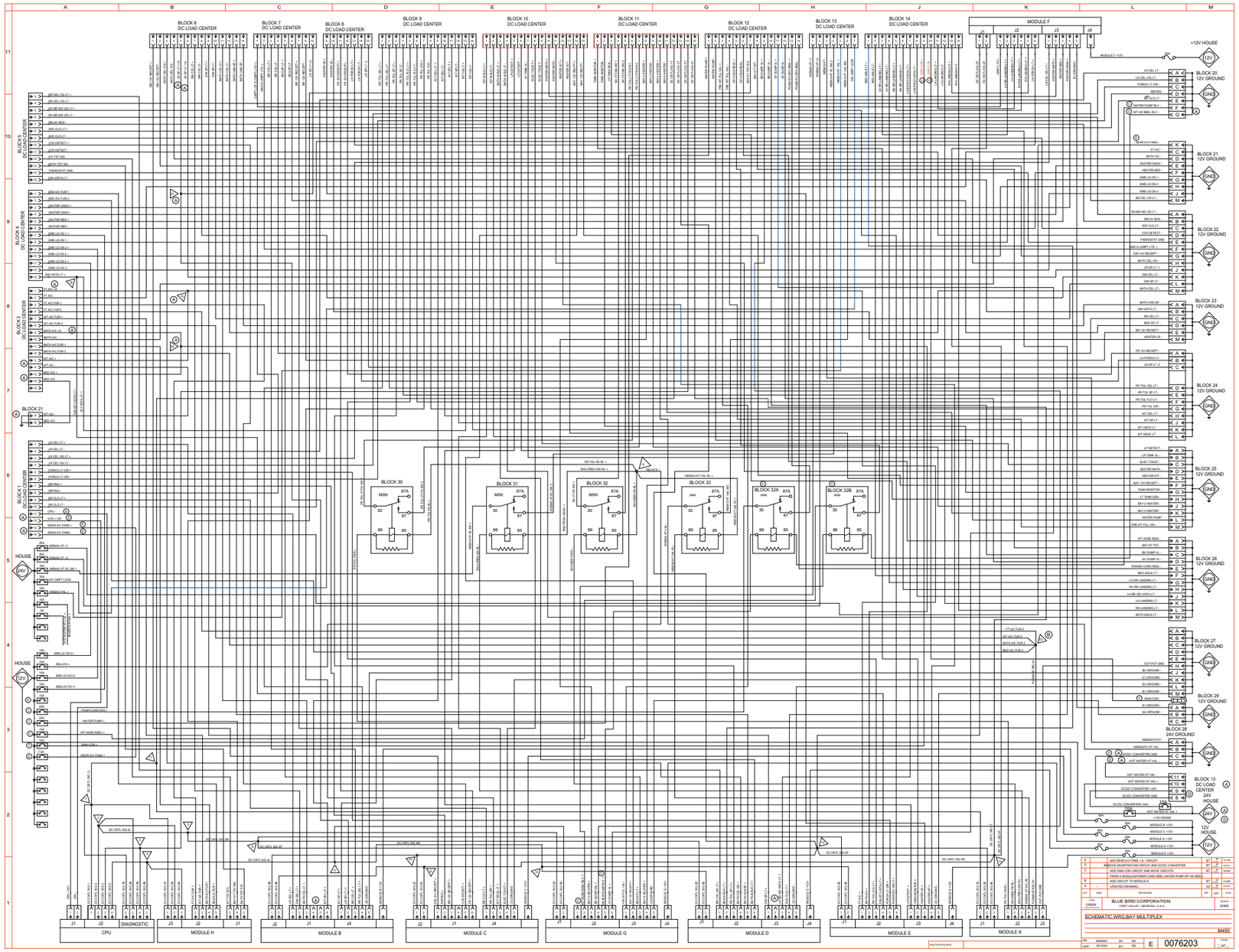

Wiring Schematic 0076203 - Bay Multiplex - **Exploded View A**

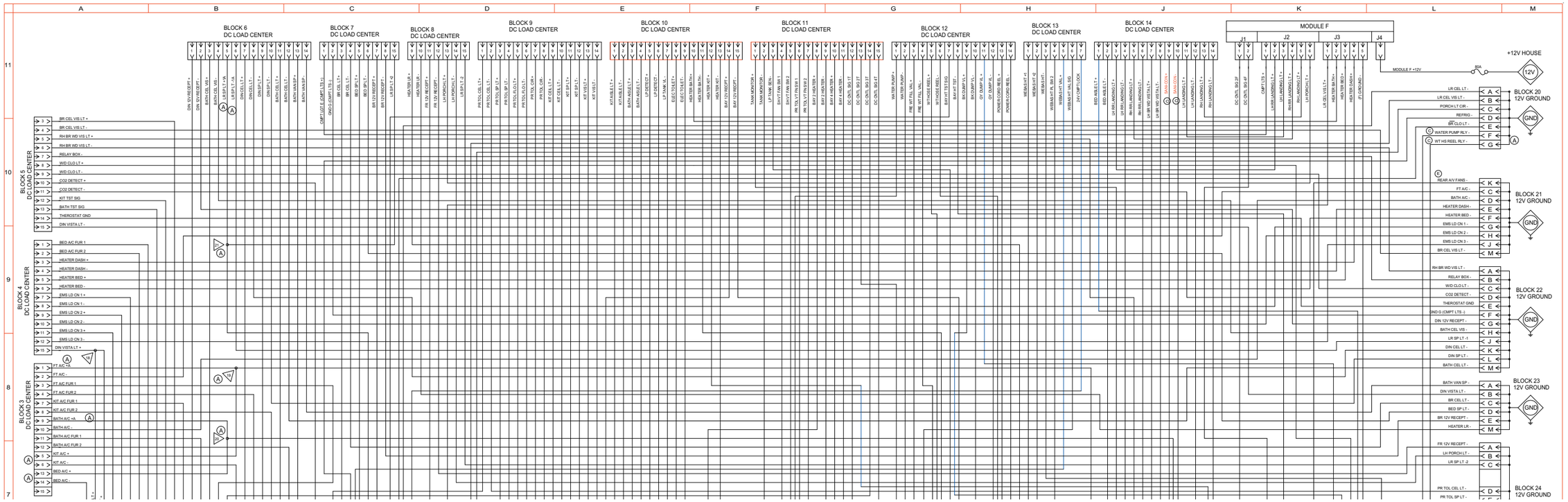

Wiring Schematic 0076203 - Bay Multiplex - **Exploded View B**

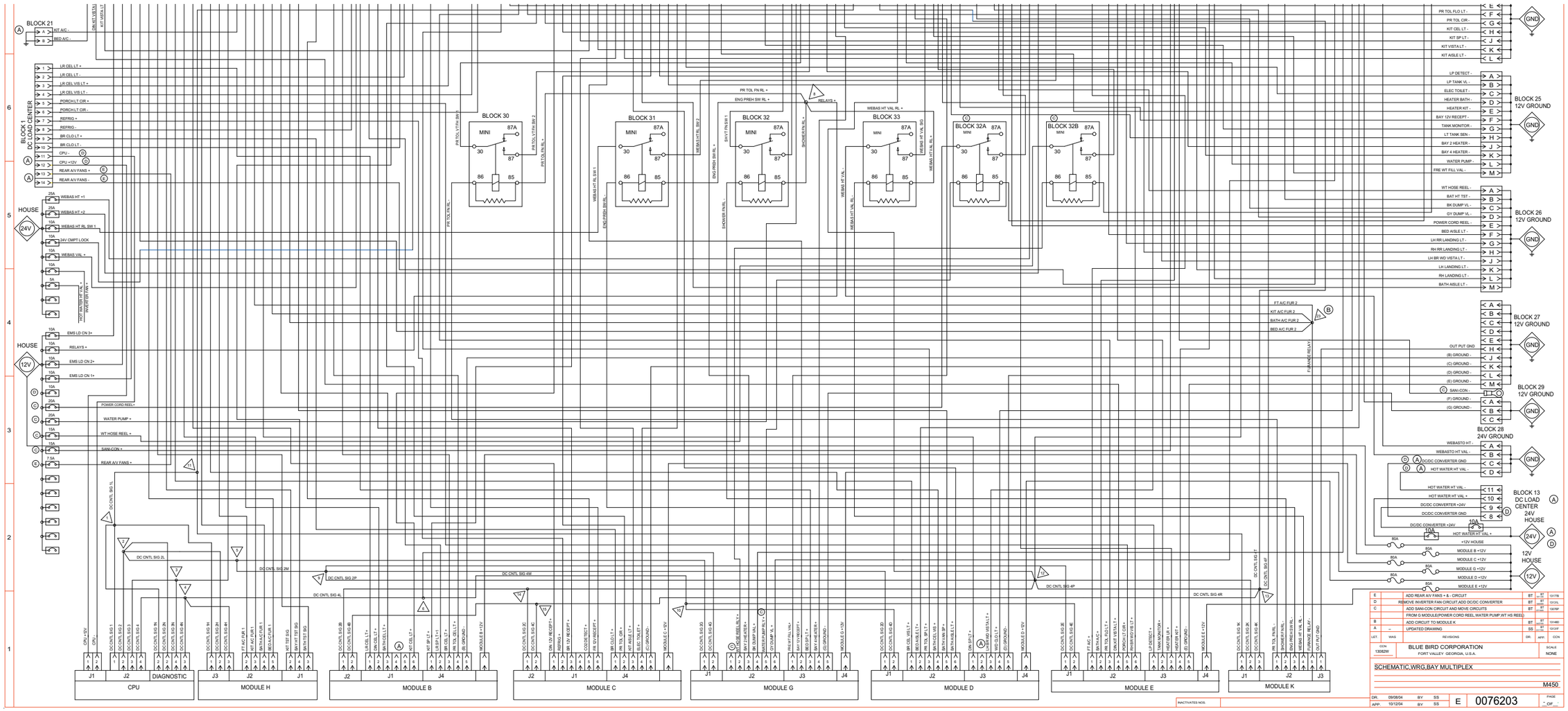

Wiring Schematic 0069318 - Overhead Panel, L/H Gauges

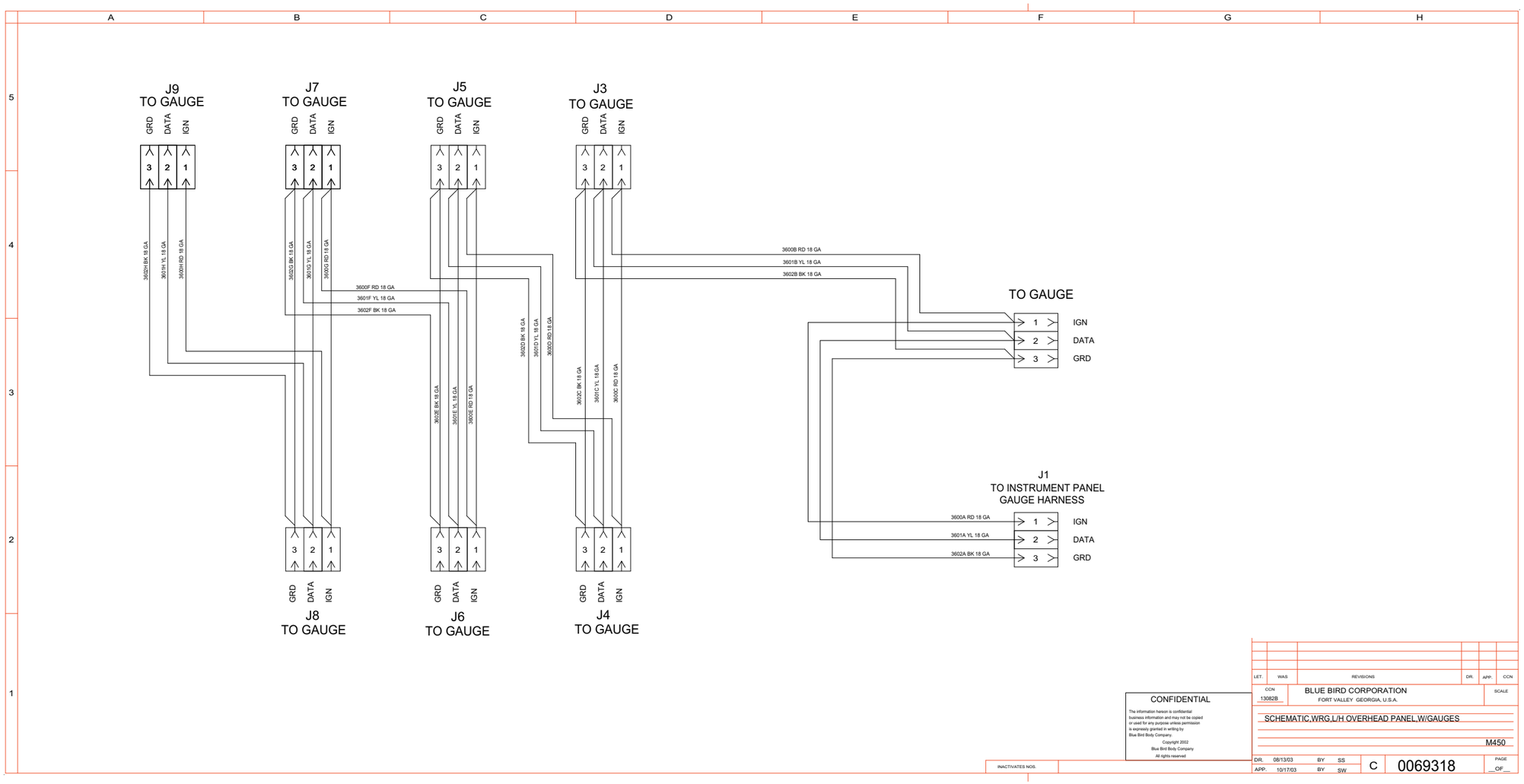

Wiring Schematic 0075037 - Slide-Out Controller, 3 Room - Page 1 of 3

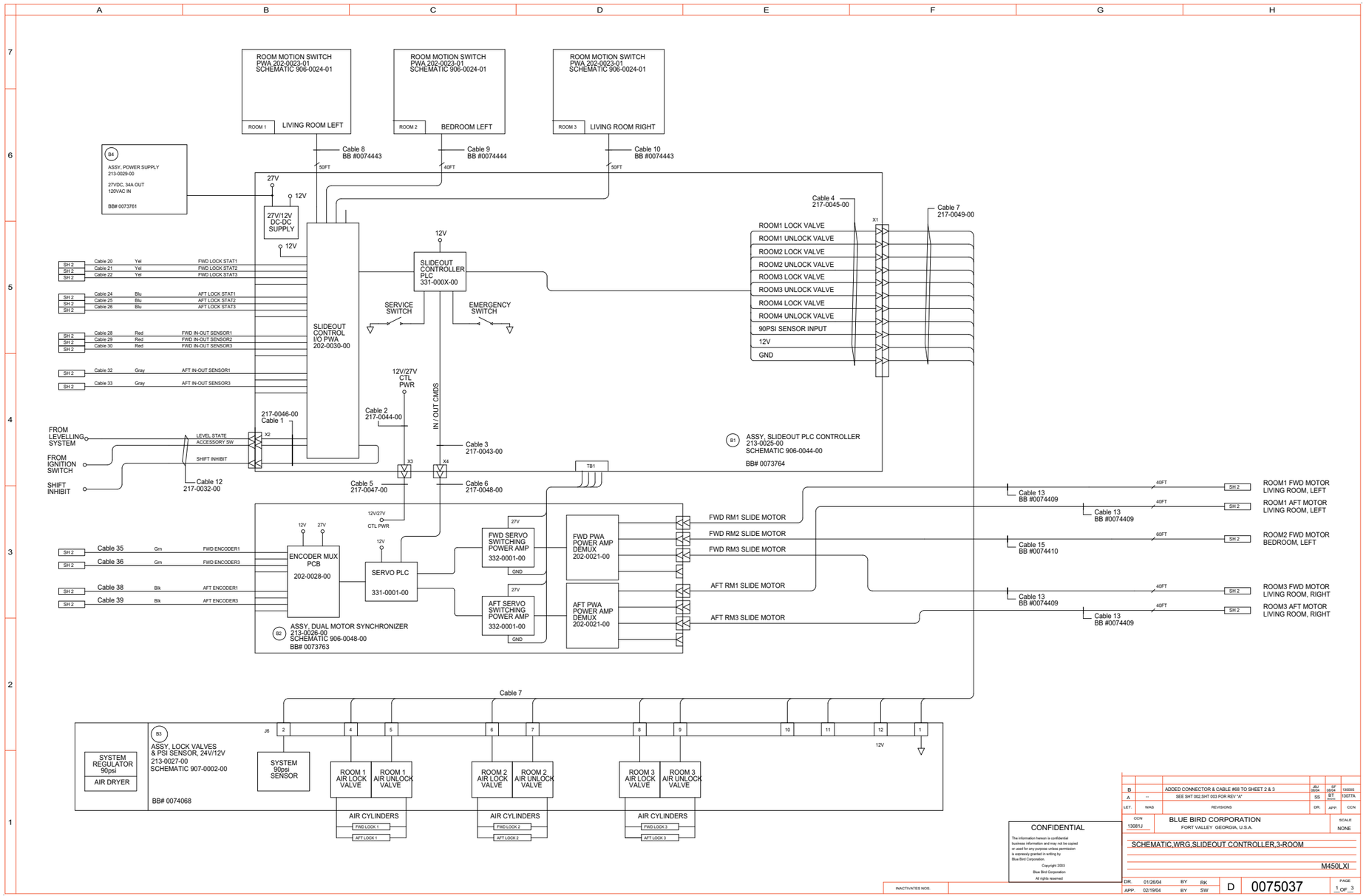

Wiring Schematic 0075037 - Slide-Out Controller, 3 Room - Page 2 of 3

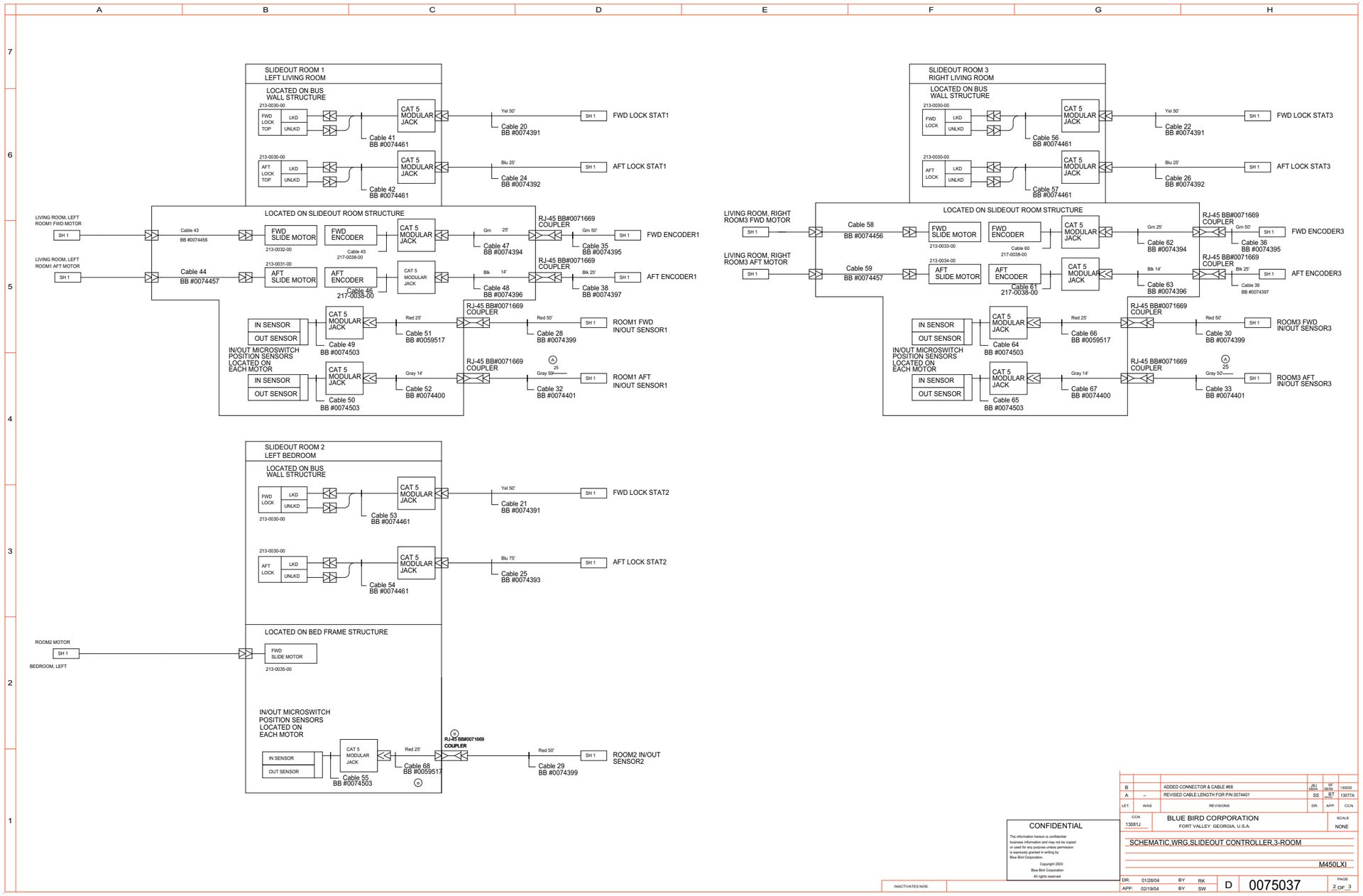

Wiring Schematic 0075037 - Slide-Out Controller, 3 Room - Page 3 of 3

CABLE	REF P/N	BB P/N	DESCRIPTION
1	217-0046-00	XXXXXXX	SHIFT INHIBIT & MISC. CAP, 24V/12V
2	217-0044-00	XXXXXXX	DUAL SYNC CONTROL POWER, CAP, 24V/12V
3	217-0043-00	XXXXXXX	DUAL SYNC ROOM CONTROL INPUTS, CAP, 24V/12V
4	217-0045-00	XXXXXXX	AIR LOCK VALVES & PSI SENSOR, CAP, 24V/12V
5	217-0047-00	XXXXXXX	DUAL SYNC CONTROL POWER, PLUG, 24V/12V
6	217-0048-00	XXXXXXX	DUAL SYNC ROOM CONTROL INPUTS, PLUG, 24V/12V
7	217-0049-00	XXXXXXX	AIR LOCK VALVES & PSI SENSOR, PLUG, 24V/12V
8	217-0050-00	0074443	ROOM MOTION SWITCH, 50 FT, 12-WIRE
9	217-0051-00	0074444	ROOM MOTION SWITCH, 35 FT, 12-WIRE
10	217-0050-00	0074443	ROOM MOTION SWITCH, 50 FT, 12-WIRE
11			
12	217-0032-00	XXXXXXX	HARNESS, SHIFT INHIBIT & MISC. PLUG
13	217-0053-02	0074409	DEMUX PWA-SLIDE MOTOR, 35 FT, PLUG-PLUG
14	217-0053-01	0074409	DEMUX PWA-SLIDE MOTOR, 35 FT, PLUG-PLUG
15	217-0053-02	0074410	DEMUX PWA-SLIDE MOTOR, 60 FT, PLUG-PLUG
16	217-0053-02	0074409	DEMUX PWA-SLIDE MOTOR, 35 FT, PLUG-PLUG
17	217-0053-01	0074409	DEMUX PWA-SLIDE MOTOR, 35 FT, PLUG-PLUG
18			
19			
20	217-0039-02	0074391	YEL, 50 FT, CAT5E RJ45
21	217-0039-02	0074391	YEL, 50 FT, CAT5E RJ45
22	217-0039-02	0074391	YEL, 50 FT, CAT5E RJ45
23			
24	217-0001-03	0074392	BLU, 25 FT, CAT5E RJ45
25	217-0002-03	0074393	BLU, 75 FT, CAT5E RJ45
26	217-0001-03	0074392	BLU, 25 FT, CAT5E RJ45
27			
28	217-0039-01	0074399	RED, 50 FT, CAT5E RJ45
29	217-0039-01	0074399	RED, 50 FT, CAT5E RJ45
30	217-0039-01	0074399	RED, 50 FT, CAT5E RJ45
31			
(A) 32	217-0039-06	0074401	GRAY, 25 FT, CAT5E, RJ45
(A) 33	217-0039-06	0074401	GRAY, 25 FT, CAT5E, RJ45
34			
35	217-0039-04	0074395	GRN, 50 FT, CAT5E, RJ45
36	217-0039-04	0074395	GRN, 50 FT, CAT5E, RJ45
37			
38	217-0001-05	0074397	BLK, 25 FT, CAT5E, RJ45
39	217-0001-05	0074397	BLK, 25 FT, CAT5E, RJ45
40			
41	217-0055-00	0074461	LOCK SENSOR INTERFACE, MODULAR JACK, RJ45
42	217-0055-00	0074461	LOCK SENSOR INTERFACE, MODULAR JACK, RJ45
43	217-0037-00	0074456	SLIDE MOTOR EXTENSION, 8 FT, PLUG-CAP
44	217-0037-00	0074457	SLIDE MOTOR EXTENSION, 20 FT, PLUG-CAP
45	217-0038-00	XXXXXXX	ENCODER-RJ45 MODULAR JACK, 28"
46	217-0038-00	XXXXXXX	ENCODER-RJ45 MODULAR JACK, 28"
47	217-0013-04	0074394	GRN, 14 FT, CAT5E, RJ45
48	217-0013-05	0074396	BLK, 14 FT, CAT5E, RJ45
49	217-0054-00	0074503	IN/OUT SENSORS, MODULAR JACK, RJ45
50	217-0054-00	0074503	IN/OUT SENSORS, MODULAR JACK, RJ45
51	217-0013-01	0059517	RED, 25 FT, CAT5E, RJ45
52	217-0013-06	0074400	GRAY, 14 FT, CAT5E, RJ45
53	217-0055-00	0074461	LOCK SENSOR INTERFACE, MODULAR JACK, RJ45
54	217-0055-00	0074461	LOCK SENSOR INTERFACE, MODULAR JACK, RJ45
55	217-0054-00	0074503	IN/OUT SENSORS, MODULAR JACK, RJ45

CABLE	REF P/N	BB P/N	DESCRIPTION
56	217-0055-00	0074461	LOCK SENSOR INTERFACE, MODULAR JACK, RJ45
57	217-0055-00	0074461	LOCK SENSOR INTERFACE, MODULAR JACK, RJ45
58	217-0037-00	0074456	SLIDE MOTOR EXTENSION, 8 FT, PLUG-CAP
59	217-0037-00	0074457	SLIDE MOTOR EXTENSION, 20 FT, PLUG-CAP
60	217-0038-00	XXXXXXX	ENCODER-RJ45 MODULAR JACK, 28"
61	217-0038-00	XXXXXXX	ENCODER-RJ45 MODULAR JACK, 28"
62	217-0013-04	0074394	GRN, 14 FT, CAT5E, RJ45
63	217-0013-05	0074396	BLK, 14 FT, CAT5E, RJ45
64	217-0054-00	0074503	IN/OUT SENSORS, MODULAR JACK, RJ45
65	217-0054-00	0074503	IN/OUT SENSORS, MODULAR JACK, RJ45
66	**217-0013-01**	0059517	RED, 25 FT, CAT5E, RJ45
67	217-0013-06	0074400	GRAY, 14 FT, CAT5E, RJ45
68	217-0013-01	0059517	RED, 25 FT, CAT5E, RJ45 (B)
69			
70			
71			
72			
73			
74			
75			
76			
77			
78			
79			

REV	WAS	REVISIONS	BY	APV	DATE
B		ADDED CONNECTOR & CABLE #68	RJC	RJC	03/01/24
A		REVISED CABLE LENGTH ON CHART FOR ITEM #32-33	BSA	RJC	02/27/24

CONFIDENTIAL

The information hereon is confidential business information and may not be copied or used for any purpose unless permission is expressly granted in writing by Blue Bird Corporation.

Copyright 2003
Blue Bird Corporation
All rights reserved

INACTIVATES NOS.

LOCK 1308TJ

BLUE BIRD CORPORATION
FORT VALLEY GEORGIA, U.S.A.

SCALE NONE

SCHEMATIC WIRG SLIDEOUT CONTROLLER 3 ROOM

M450LXI

DR 01/08/04 BY BW
APP 02/18/04 BY BW

D 0075037

PAGE 3 OF 3

Wiring Schematic 0076352 - EMS, Load Center, 120V

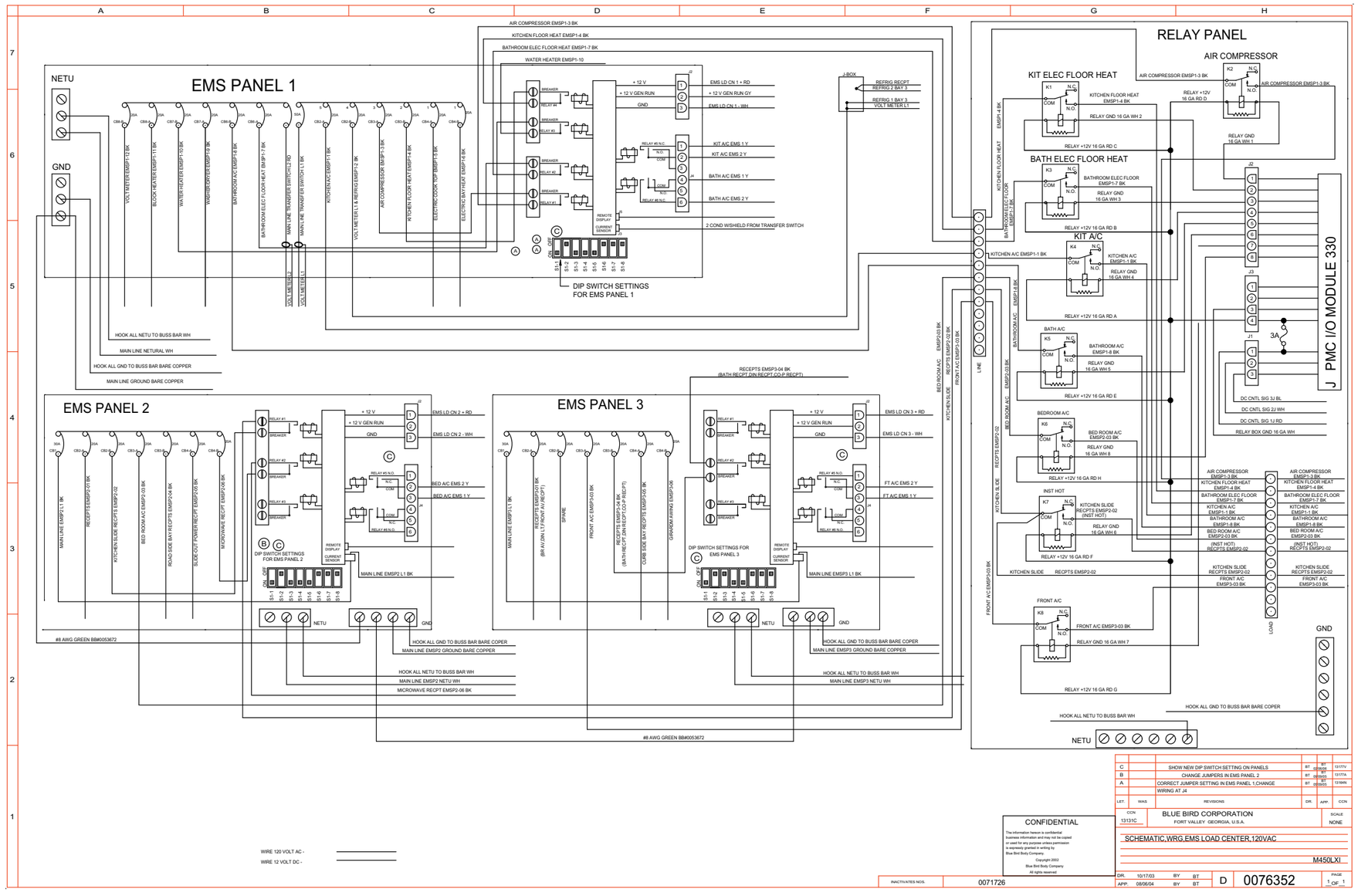

Wiring Schematic 0080496 - Auxiliary, 120V Inverter

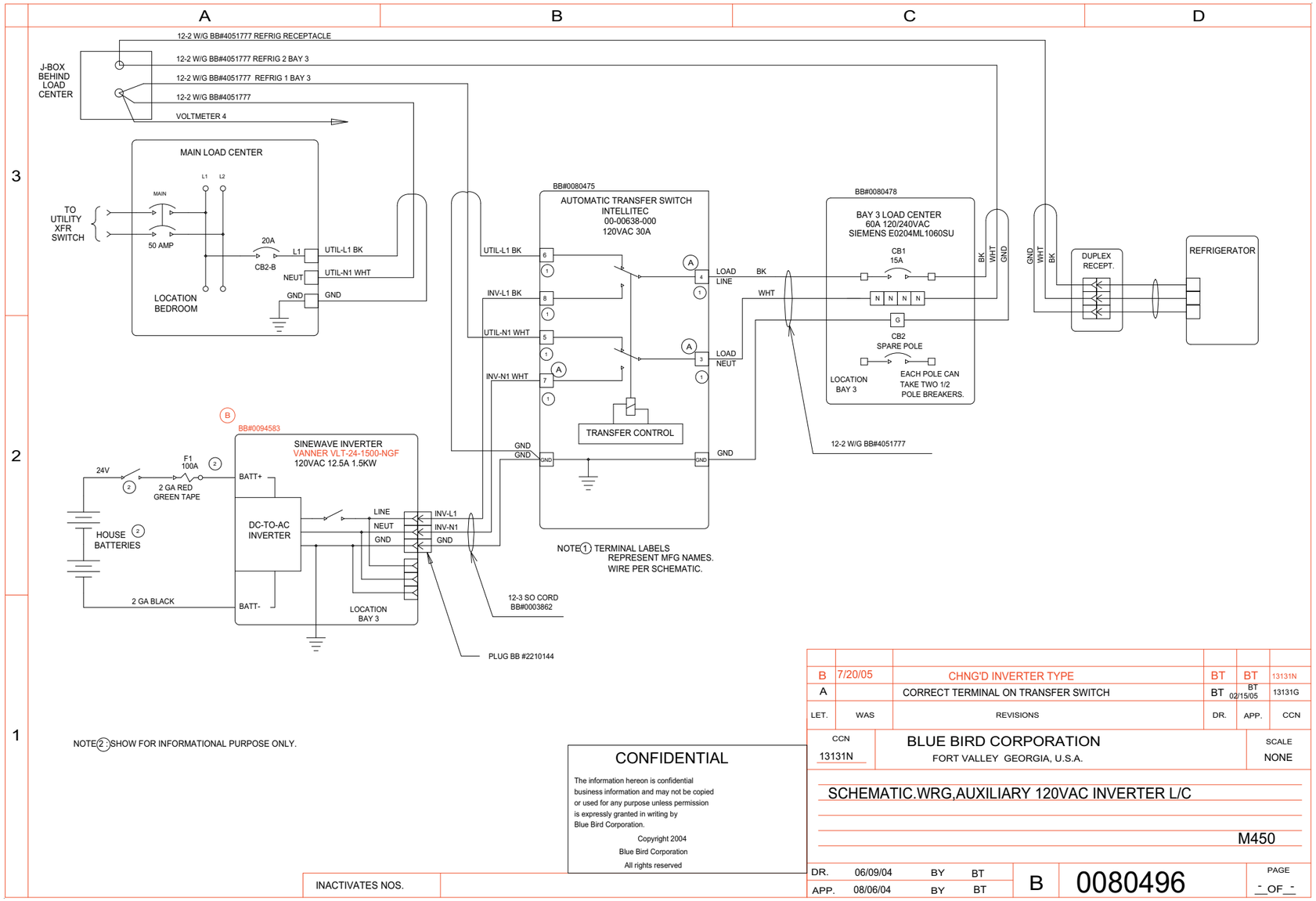

LET.	WAS	REVISIONS	DR.	APP.	CCN
B	7/20/05	CHNG'D INVERTER TYPE	BT	BT	13131N
A		CORRECT TERMINAL ON TRANSFER SWITCH	BT	BT 02/15/05	13131G

CCN 13131N

BLUE BIRD CORPORATION
FORT VALLEY GEORGIA, U.S.A.

SCALE NONE

SCHEMATIC.WRG,AUXILIARY 120VAC INVERTER L/C

M450

DR. 06/09/04 BY BT
APP. 08/06/04 BY BT

B 0080496

PAGE -_OF_-

INACTIVATES NOS.

CONFIDENTIAL

The information hereon is confidential business information and may not be copied or used for any purpose unless permission is expressly granted in writing by Blue Bird Corporation.

Copyright 2004
Blue Bird Corporation
All rights reserved

Wiring Schematic 0075825 - Cable, Power Distribution

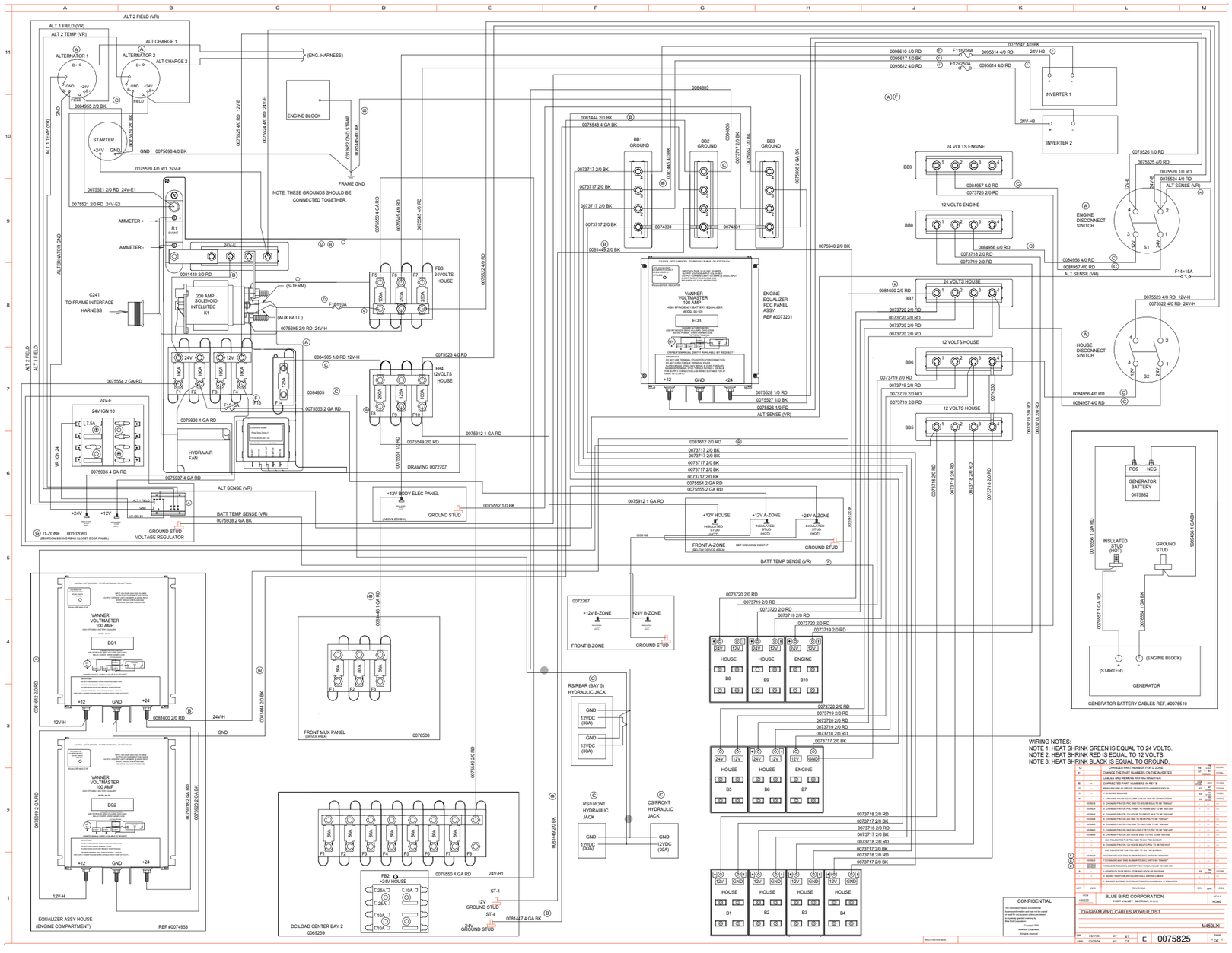

Wiring Schematic 0075825 - Cable, Power Distribution - **Exploded View A**

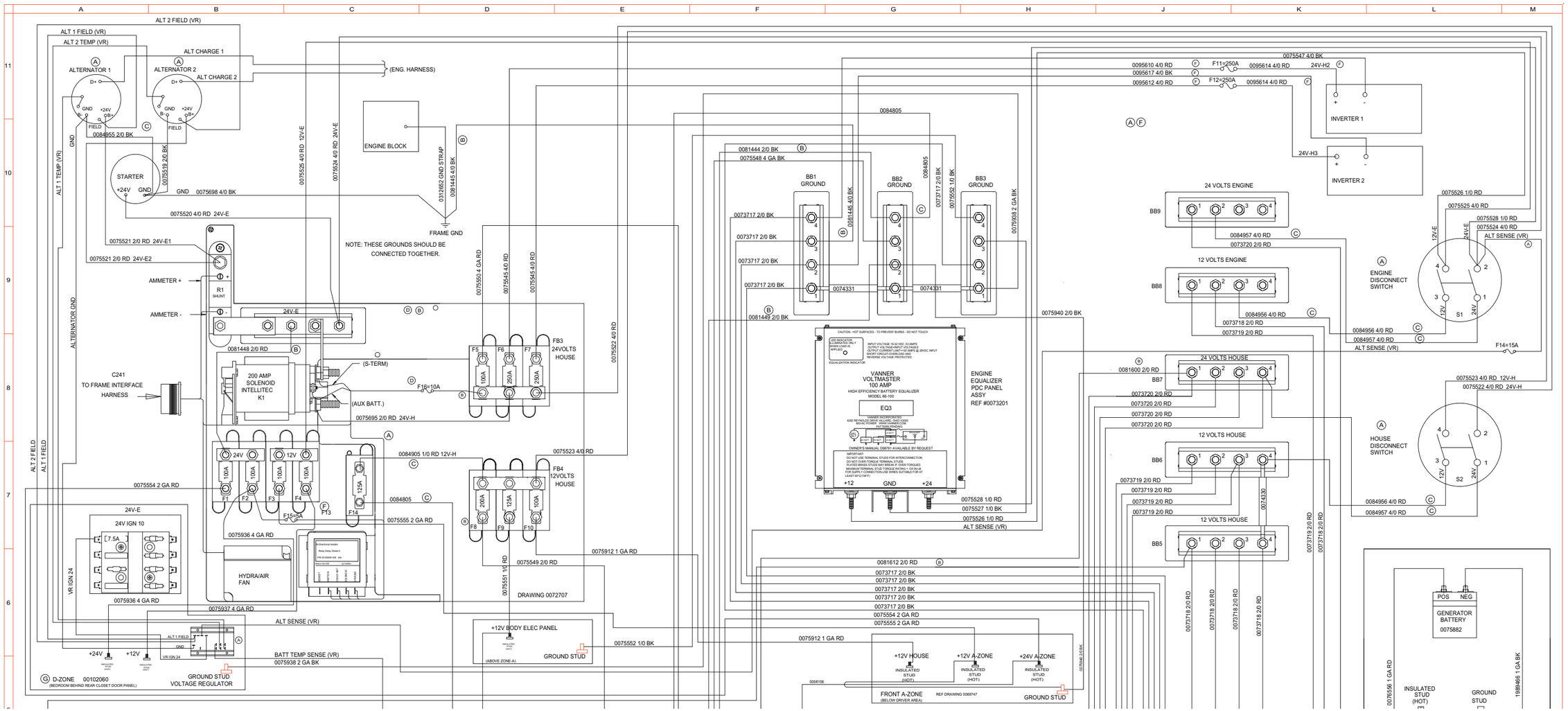

Wiring Schematic 0075825 - Cable, Power Distribution - **Exploded View B**

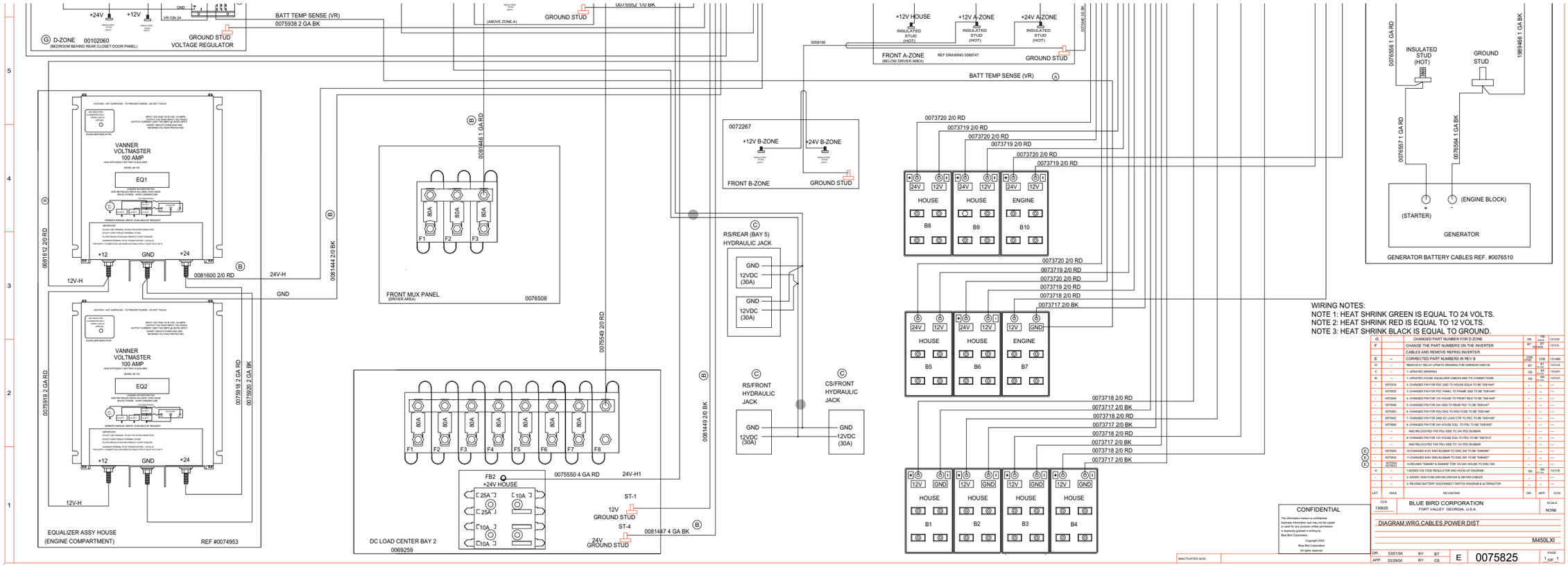

Wiring Schematic 0070060 - Dataloops

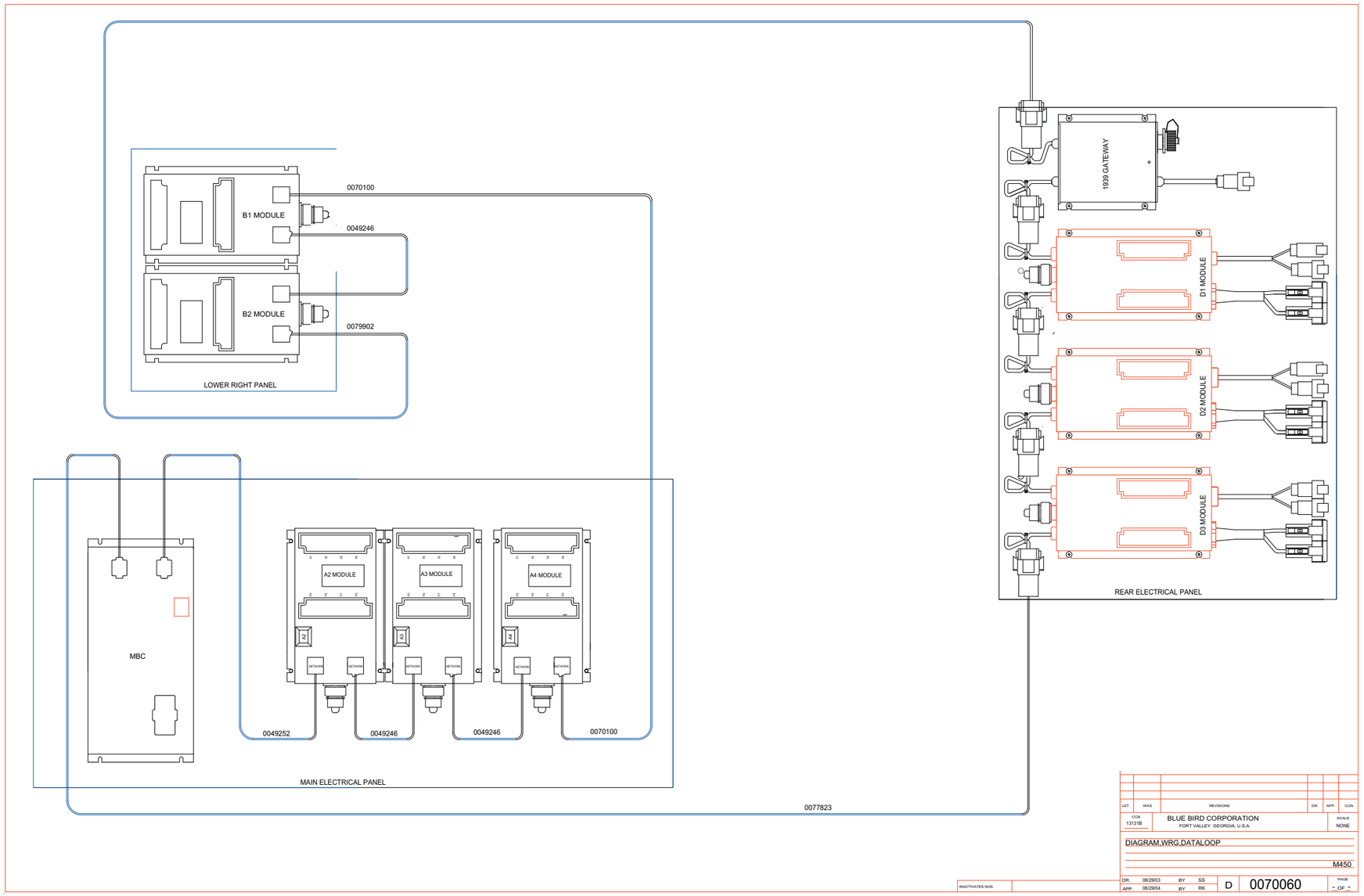

Wiring Schematic 0075601 - Front, A/V

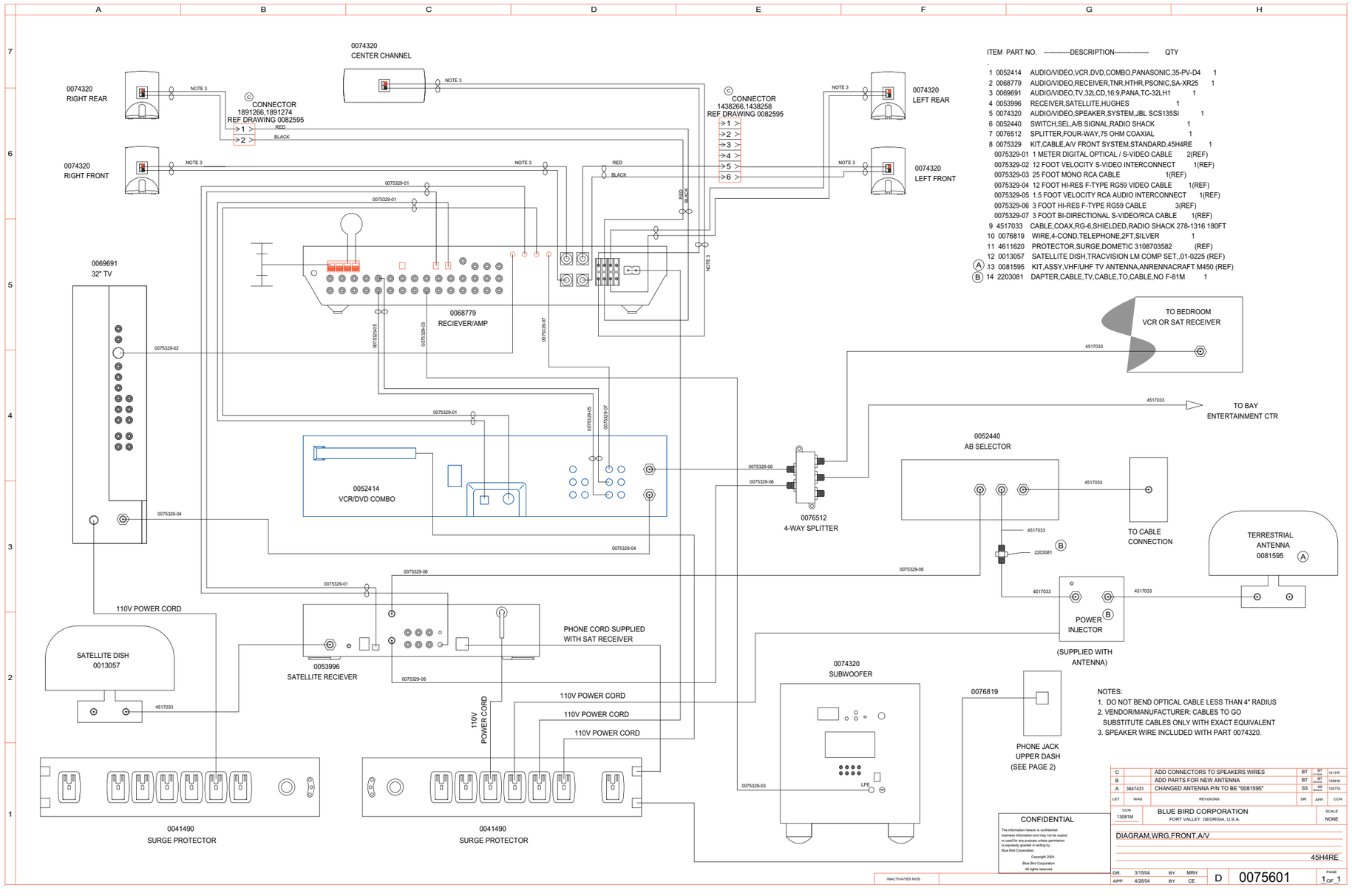

ITEM	PART NO.	DESCRIPTION	QTY
1	0052414	AUDIO/VIDEO,VCR,DVD,COMBO,PANASONIC,35-PV-D4	1
2	0068779	AUDIO/VIDEO,RECEIVER,TNR,HTHR,PSONIC,SA-XR25	1
3	0069691	AUDIO/VIDEO,TV,32LCD,16:9,PANA,TC-32LH1	1
4	0053996	RECEIVER,SATELLITE,HUGHES	1
5	0074320	AUDIO/VIDEO,SPEAKER,SYSTEM,JBL SCS135SI	1
6	0052440	SWITCH,SEL,A/B SIGNAL,RADIO SHACK	1
7	0076512	SPLITTER,FOUR-WAY,75 OHM COAXIAL	1
8	0075329	KIT,CABLE,A/V FRONT SYSTEM,STANDARD,45H4RE	1
	0075329-01	1 METER DIGITAL OPTICAL / S-VIDEO CABLE	2(REF)
	0075329-02	12 FOOT VELOCITY S-VIDEO INTERCONNECT	1(REF)
	0075329-03	25 FOOT MONO RCA CABLE	1(REF)
	0075329-04	12 FOOT HI-RES F-TYPE RG59 VIDEO CABLE	1(REF)
	0075329-05	1.5 FOOT VELOCITY RCA AUDIO INTERCONNECT	1(REF)
	0075329-06	3 FOOT HI-RES F-TYPE RG59 CABLE	3(REF)
	0075329-07	3 FOOT BI-DIRECTIONAL S-VIDEO/RCA CABLE	1(REF)
9	4517033	CABLE,COAX,RG-6,SHIELDED,RADIO SHACK 278-1316 180FT	
10	0076819	WIRE,4-COND,TELEPHONE,2FT,SILVER	1
11	4611620	PROTECTOR,SURGE,DOMETIC 3108703582	(REF)
12	0013057	SATELLITE DISH,TRACVISION LM COMP SET,,01-0225	(REF)
A 13	0081595	KIT,ASSY,VHF/UHF TV ANTENNA,ANRENNACRAFT M450	(REF)
B 14	2203081	DAPTER,CABLE,TV,CABLE,TO,CABLE,NO F-81M	1

NOTES:
1. DO NOT BEND OPTICAL CABLE LESS THAN 4" RADIUS
2. VENDOR/MANUFACTURER: CABLES TO GO
   SUBSTITUTE CABLES ONLY WITH EXACT EQUIVALENT
3. SPEAKER WIRE INCLUDED WITH PART 0074320.

LET.	WAS	REVISIONS	DR.	APP.	CCN
C		ADD CONNECTORS TO SPEAKERS WIRES	BT	BT 03/15/04	13131F
B		ADD PARTS FOR NEW ANTENNA	BT	BT 08/05/03	13081K
A	3847431	CHANGED ANTENNA P/N TO BE "0081595"	SS	SS 06/24/03	13077A

CONFIDENTIAL

The information herein is confidential business information and may not be copied or used for any purpose unless permission is expressly granted in writing by Blue Bird Corporation.
Copyright 2004
Blue Bird Corporation
All rights reserved

INACTIVATES NOS.

CCN 13081M — BLUE BIRD CORPORATION, FORT VALLEY GEORGIA, U.S.A. — SCALE NONE

DIAGRAM,WRG,FRONT,A/V

45H4RE

DR. 3/15/04 BY MRH
APP. 4/26/04 BY CE
D 0075601
PAGE 1 OF 1

Wiring Schematic 0091200 - 120Vac, Power Distribution, W/EMS, Floorplan A - Page 1 of 2

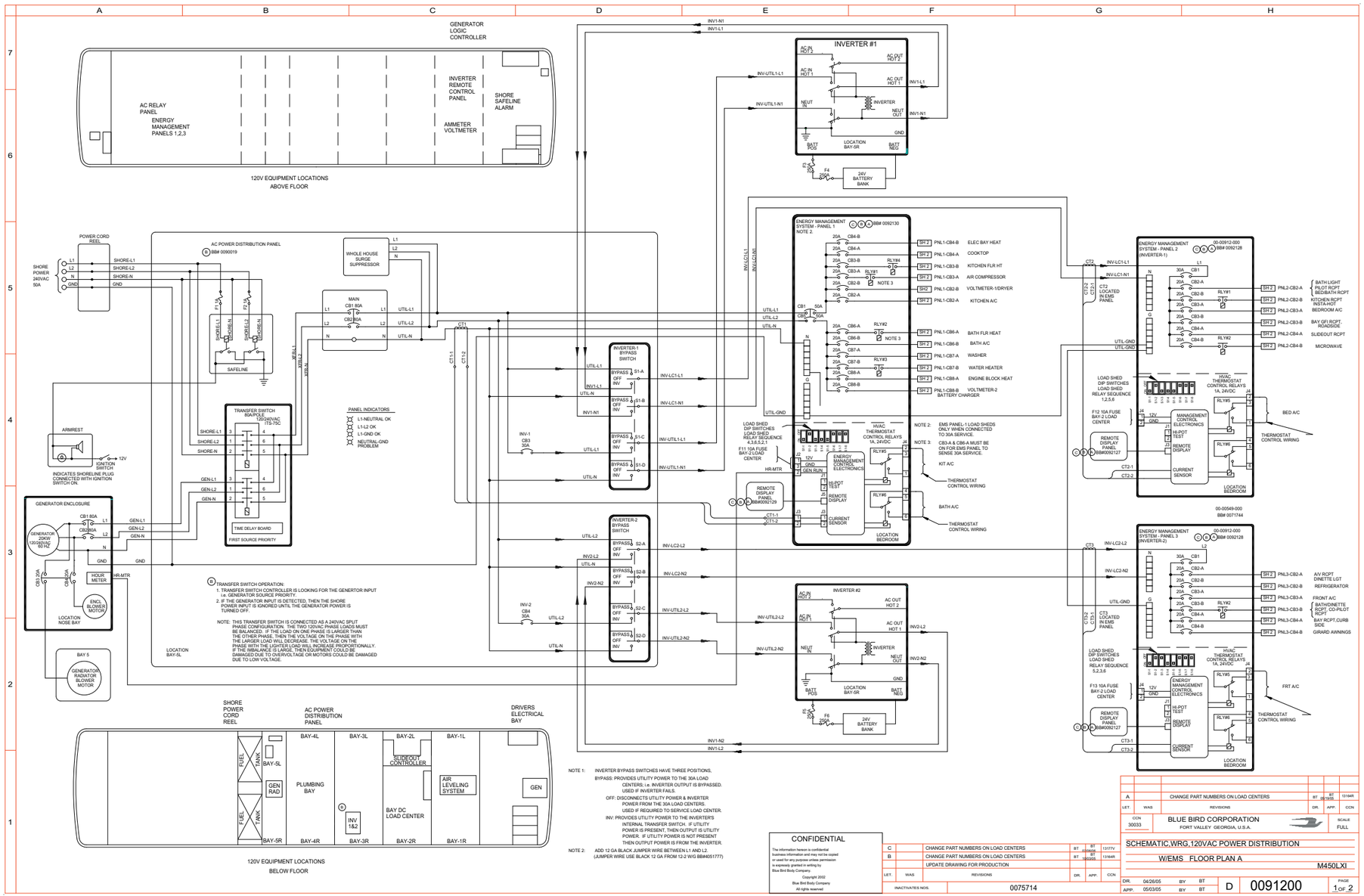

Wiring Schematic 0091200 - 120Vac, Power Distribution, W/EMS, Floorplan A - Page 2 of 2

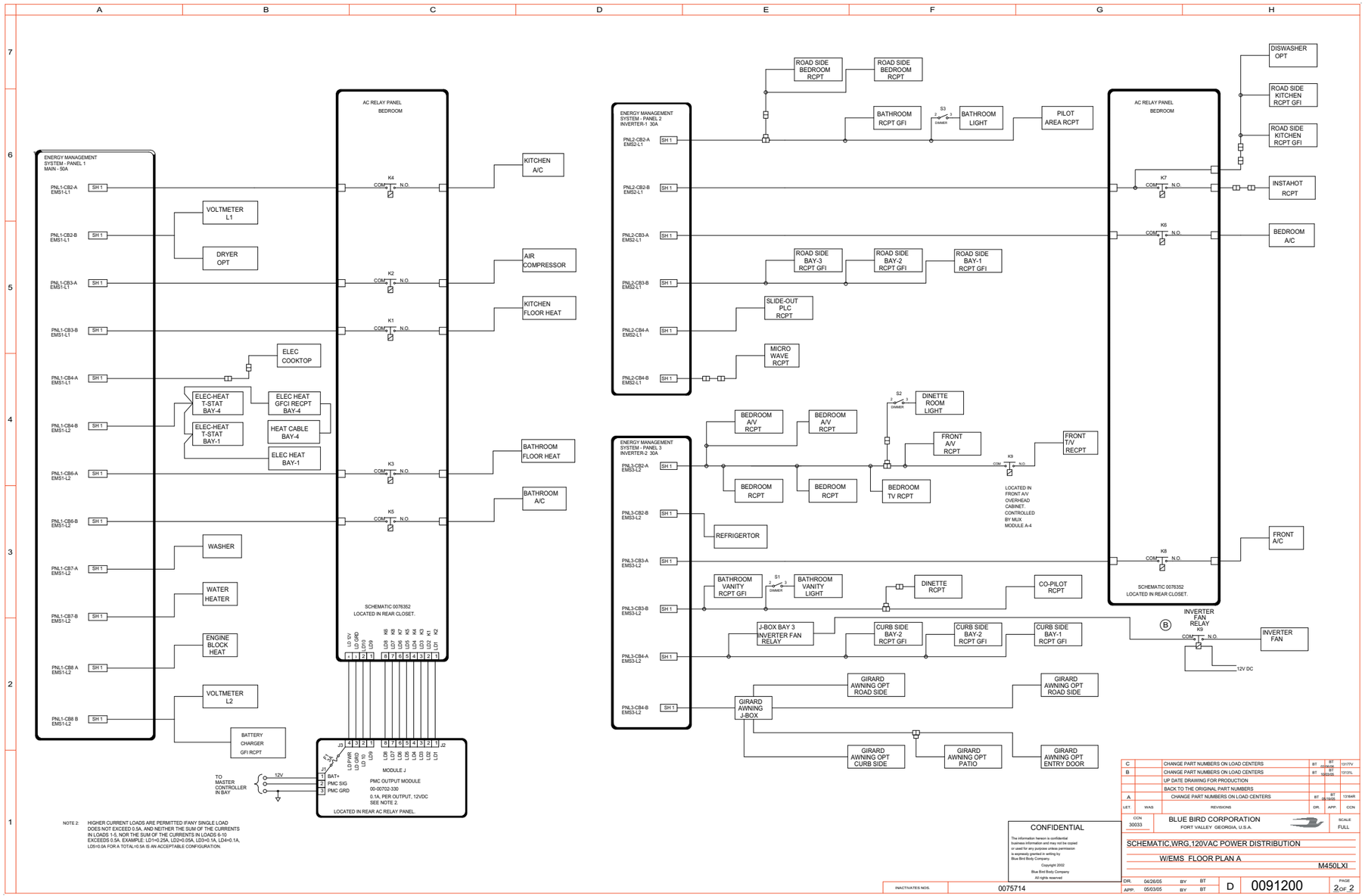

Wiring Schematic 0074465 - Power Distribution, DC

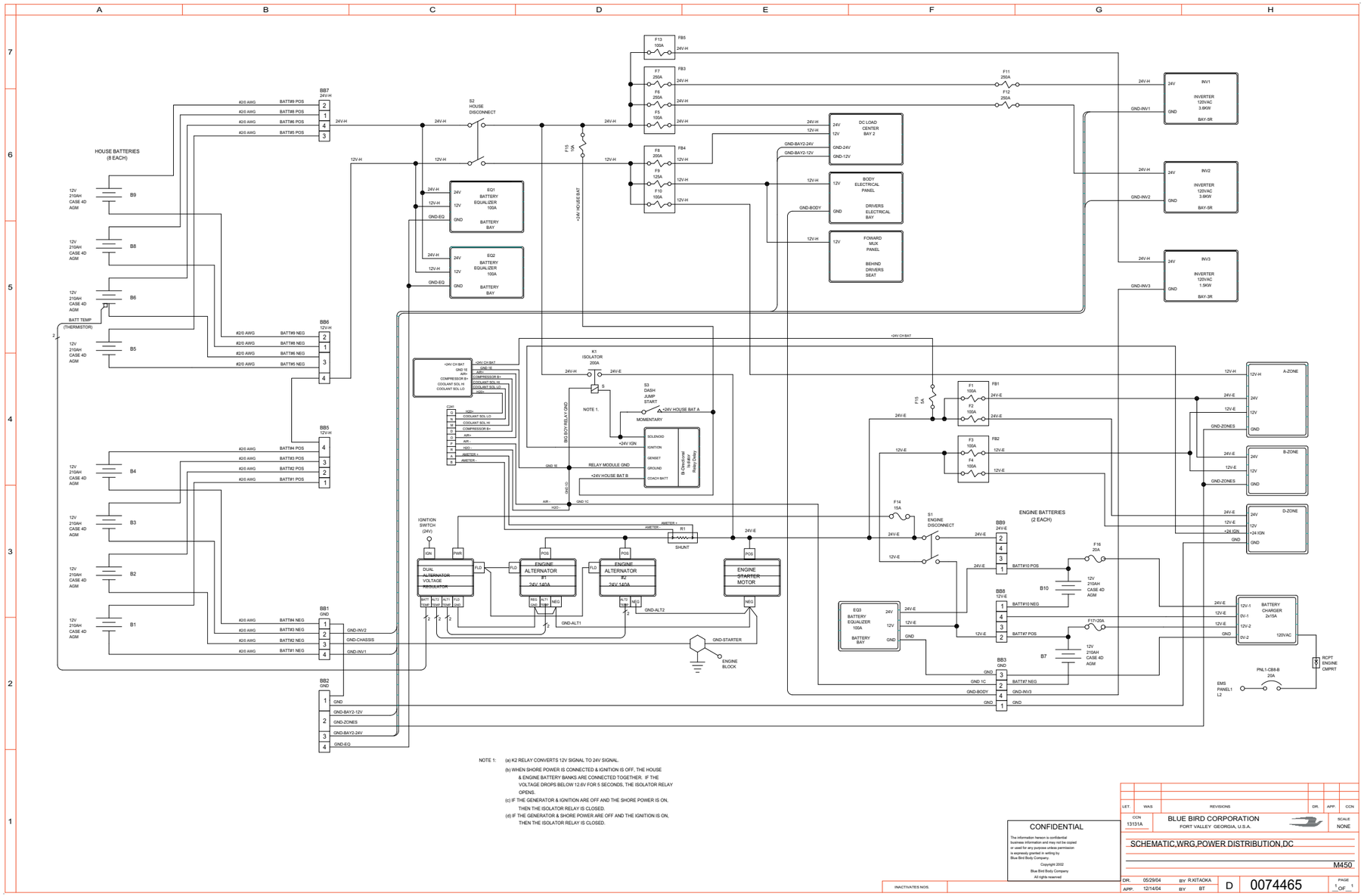

Wiring Schematic 0075600 - Rear A/V

NOTES:
1. DIAGRAM SHOWS WIRING WITH OPTIONAL SATELLITE RECEIVER (FEA 3811229) AND ADDITIONAL WIRING COMPONENTS AS DASHED LINES.
2. SPEAKER WIRES PROVIDED WITH DVD STEREO. MATCH CORRESPONDING WIRE COLORS TO RESPECTIVE TERMINALS ON SPEAKERS AND BASE UNIT AS ILLUSTRATED.
3. COAXIAL CABLE CARRYING ANTENNA/CABLE SIGNAL FROM FRONT SPLITTER IS PLUGGED INTO VCR AT "ANTENNA IN". WITH SAT RECEIVER (FEA 3811229), MOVE CABLE FROM VCR TO THE "ANTENNA IN" CONNECTION OF THE SATELLITE RECEIVER.
4. VENDOR: CABLES TO GO SUBSTITUTE CABLE ONLY WITH EXACT EQUIVALENT.
5. REPLACE 20" TV (0068778) WITH 32" TV (0069691) WITH FEA 3810515. CONNECT WIRING TO SAME INPUT CONNECTIONS AS 20" TV.

ITEM	PART NO.	----------DESCRIPTION----------	QTY	
1	0070410	AUDIO/VIDEO,DVD,COMPACT,PANASONIC,SC-DPI	1	
2	0070411	AUDIO/VIDEO,VCR,HIFI,ST,PANA,35-PV-V4523S	1	
3	0068778	AUDIO/VIDEO,TV,20LCD,4:3,PANASONIC,TC20LA1	1	
4	0075331	KIT,CABLE,A/V REAR SYSTEM,STANDARD	1	
	0075331-01	3 FOOT VELOCITY RCA AUDIO INTERCONNECT	1(REF)	
	0075331-02	12 FOOT VELOCITY S-VIDEO INTERCONNECT	1(REF)	
	0075331-03	12 FOOT HI-RES F-TYPE RG59 VIDEO CABLE	1(REF)	
	0075331-04	12 FOOT HI-RES RCA VIDEO CABLE	1(REF)	
5	4517033	CABLE,COAX,RG-6 CABLE,CF-5	(REF)	
6	0053996	RECEIVER,SATELLITE,HUGHES	1	(FEA 3811229)
7	0076819	WIRE,4-COND,TELEPHONE,2FT,SILVER	1	(FEA 3811229)
8	0076550	KIT,CABLE,A/V,RR SYSTEM,FEA 3811229,45H4RE	1	(FEA 3811229)
	0076550-01	3 FOOT VELOCITY RCA AUDIO INTERCONNECT	1(REF)	
	0076550-02	12 FOOT VELOCITY S-VIDEO INTERCONNECT	1(REF)	
	0076550-03	3 FOOT HI-RES F-TYPE RG59 CABLE	1(REF)	
9	0041490	POWER STRIP,AC SURGE,2002 WL	(REF)	
10	0013057	SATELLITE DISH,TRACVISION LM COMP SET,01-0225	(REF)	
11	0076512	SPLITTER,FOUR-WAY,75 OHM COAXIAL	(REF)	
12	0069691	AUDIO/VIDEO,TV,32LCD,16:9,PANA,TC-32LH1	1	(FEA 3810515)

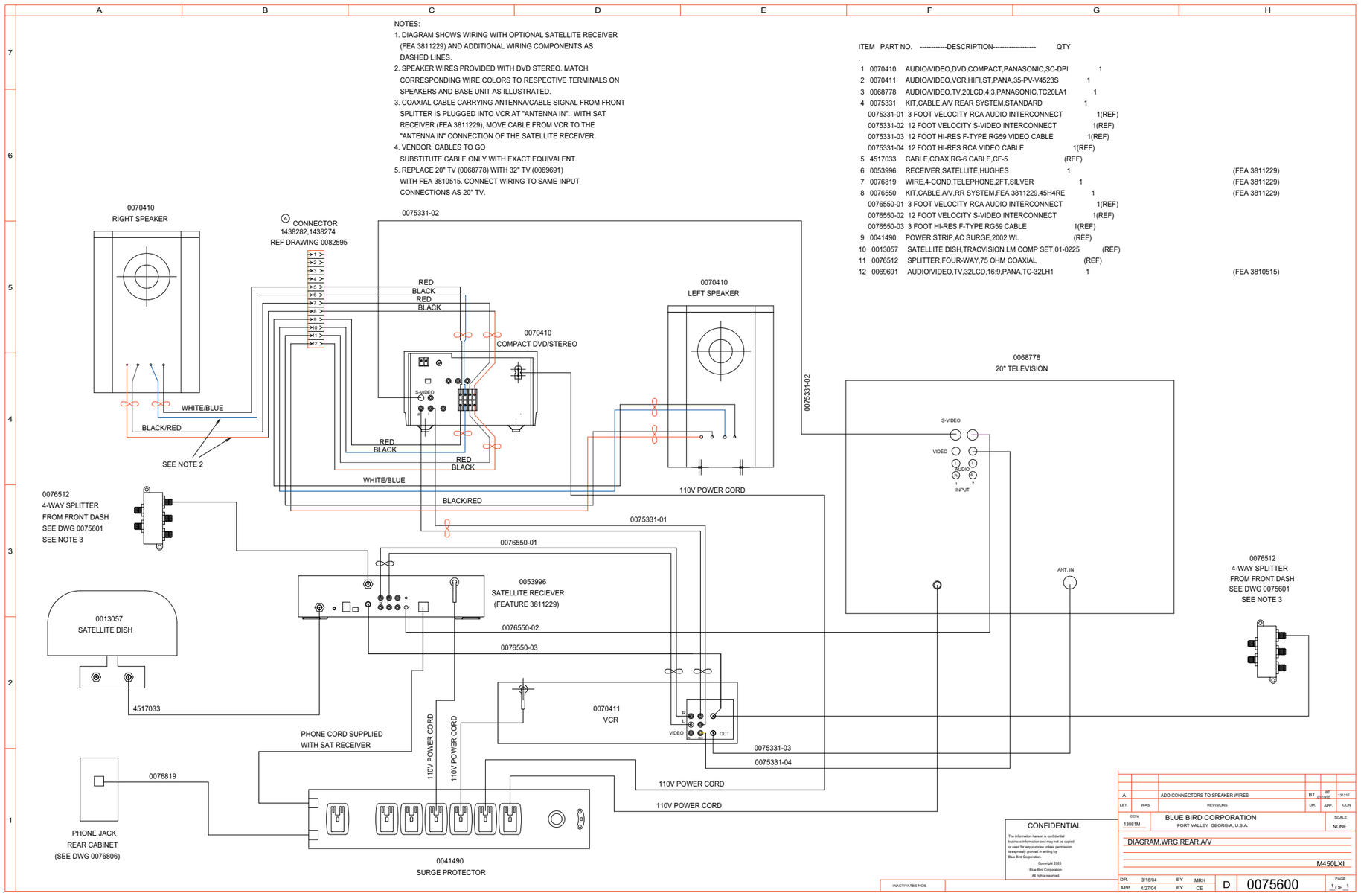

Wiring Schematic 0076919- Onstar Communication

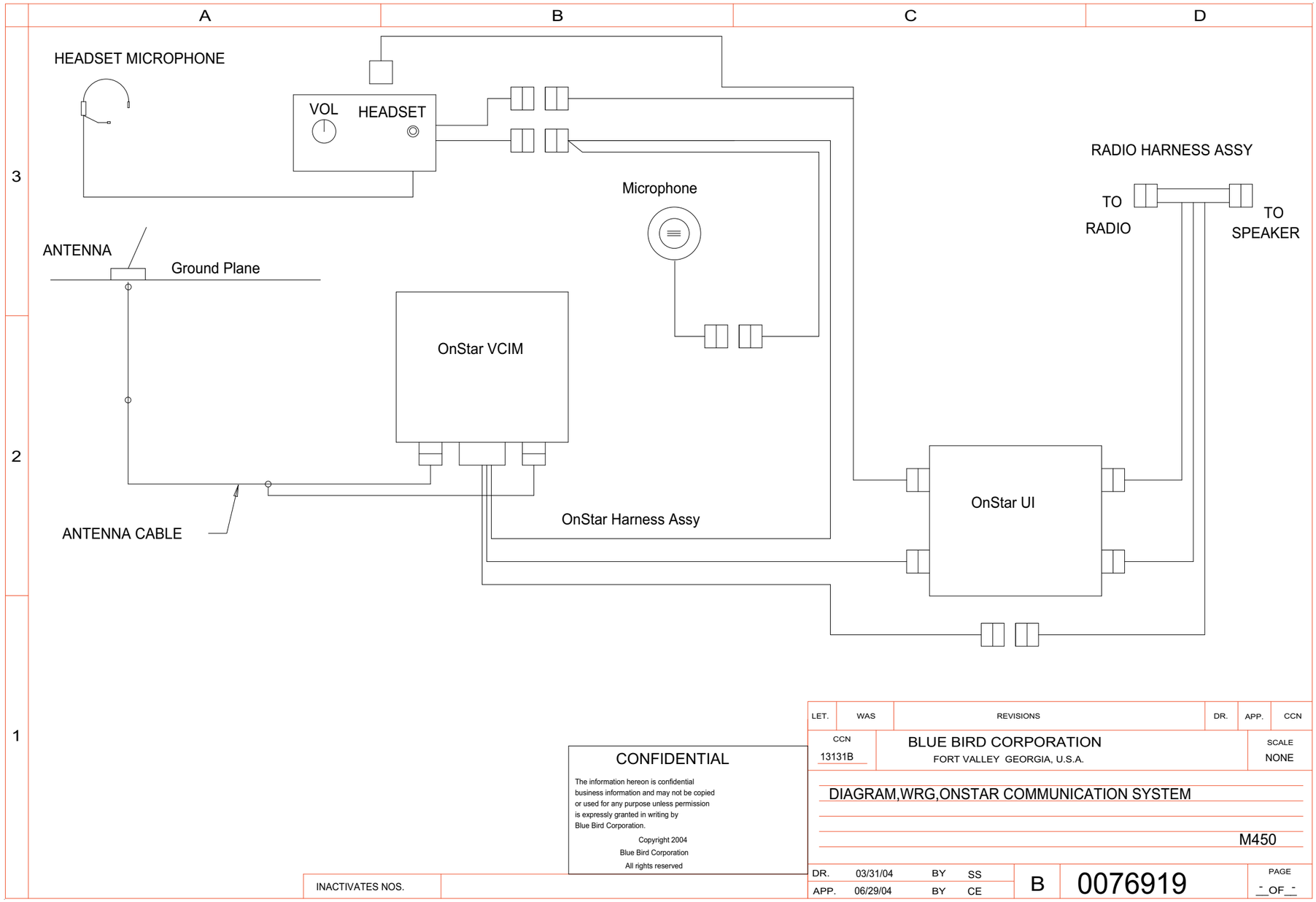

Wiring Schematic 0078105 - Luggage Comp 1

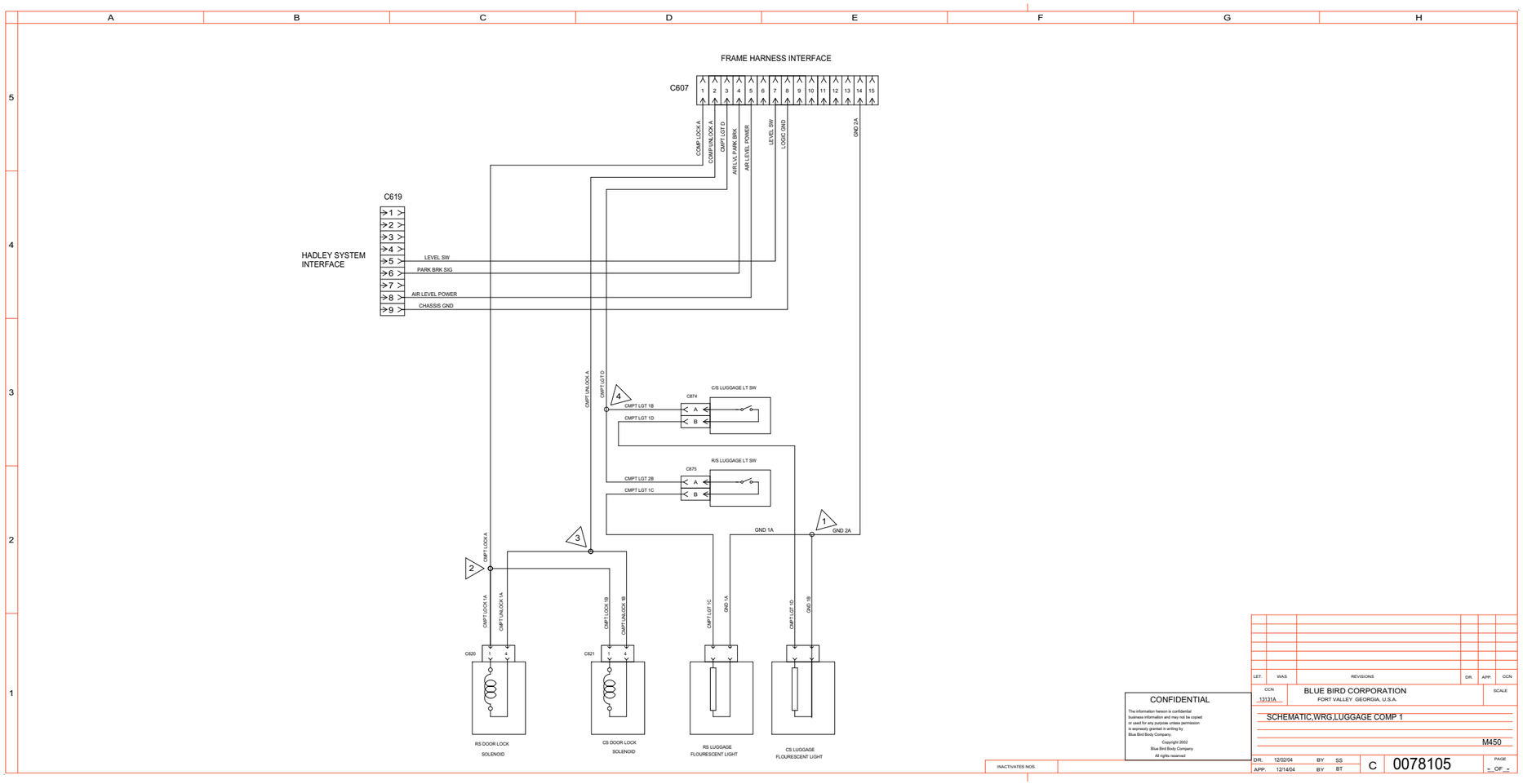

Wiring Schematic 0080226 - Luggage Comp 2

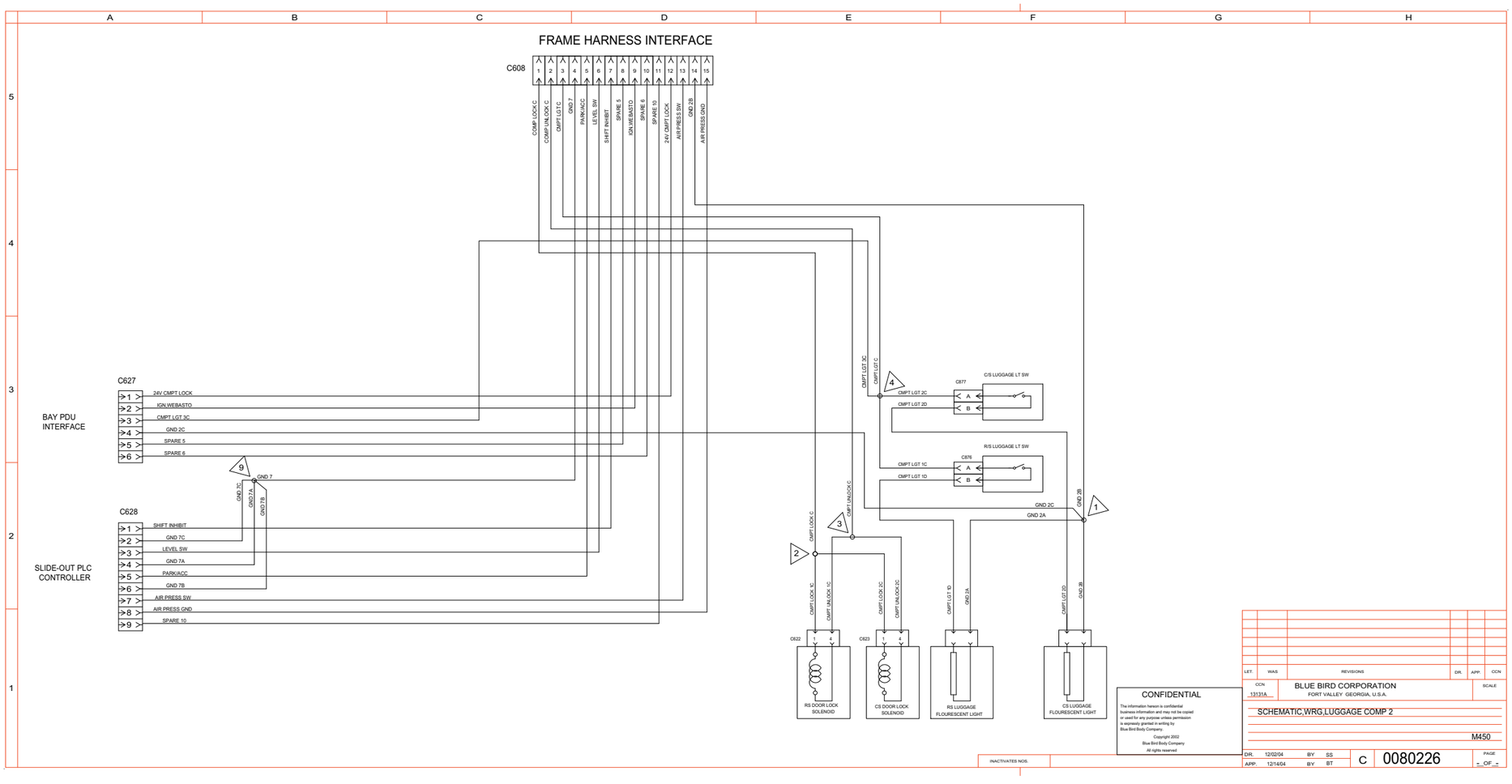

Wiring Schematic 0081265 - Luggage Comp 3

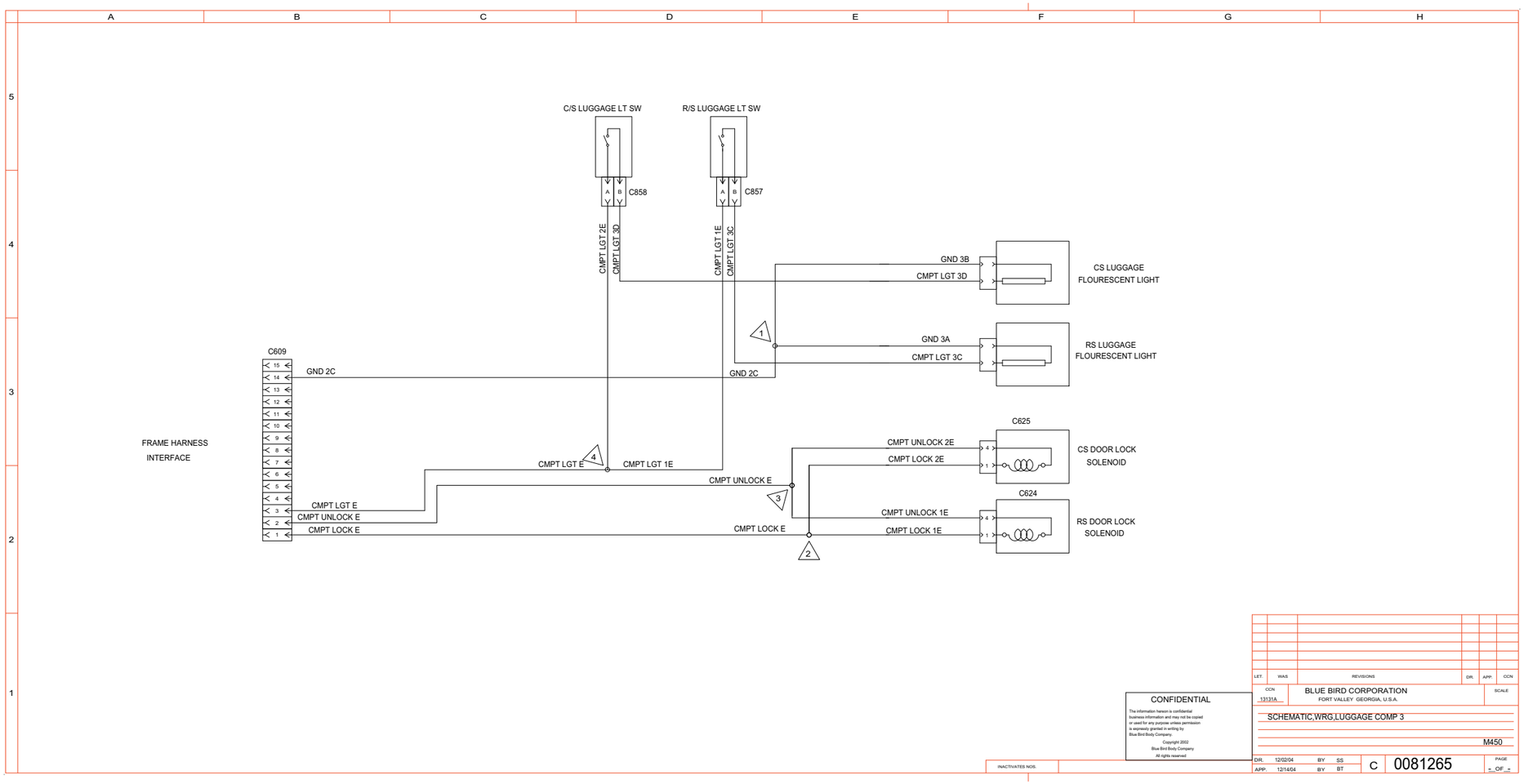

Wiring Schematic 0082266 - Luggage Comp. 4

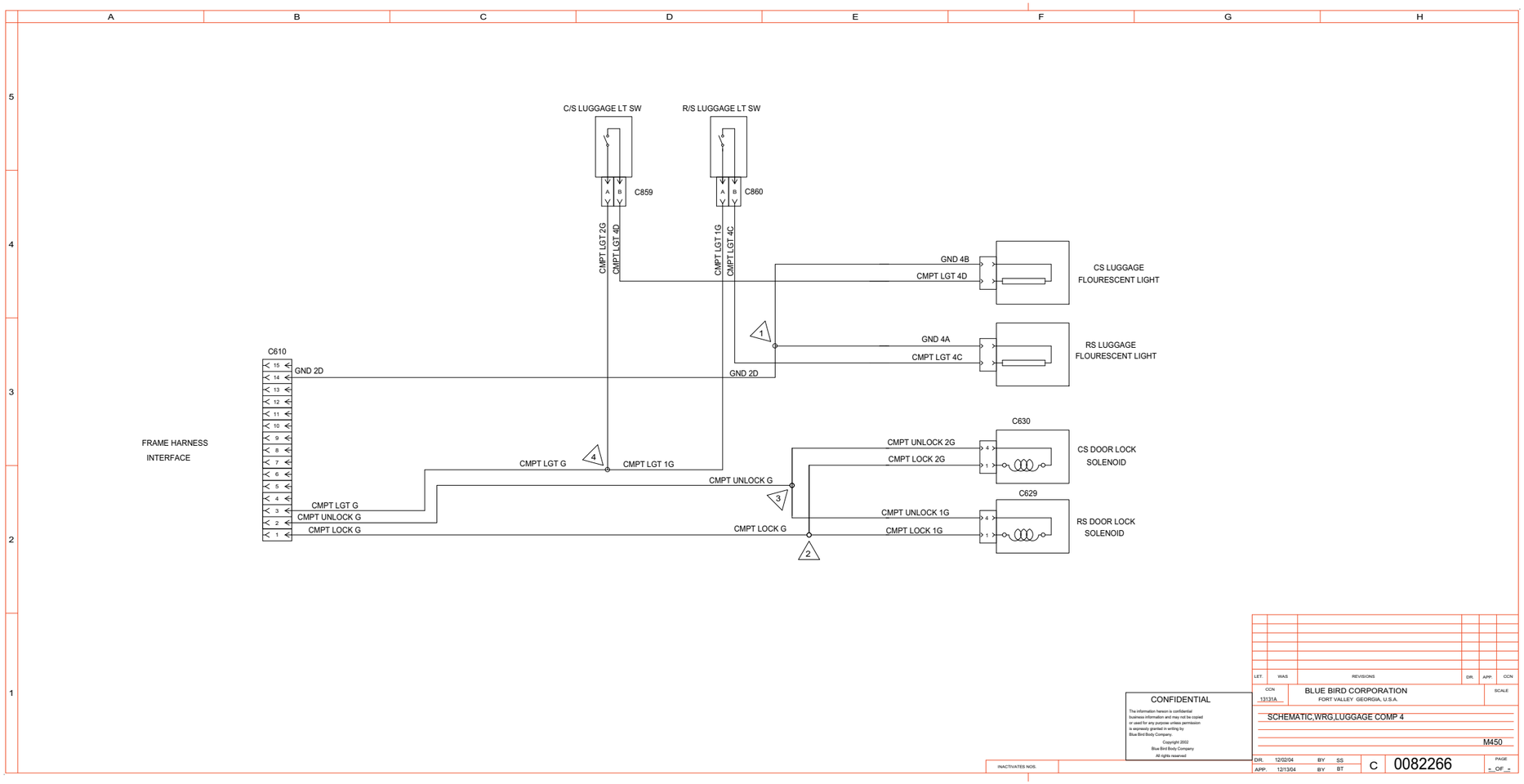

Wiring Schematic 0084199 - Luggage Comp 5

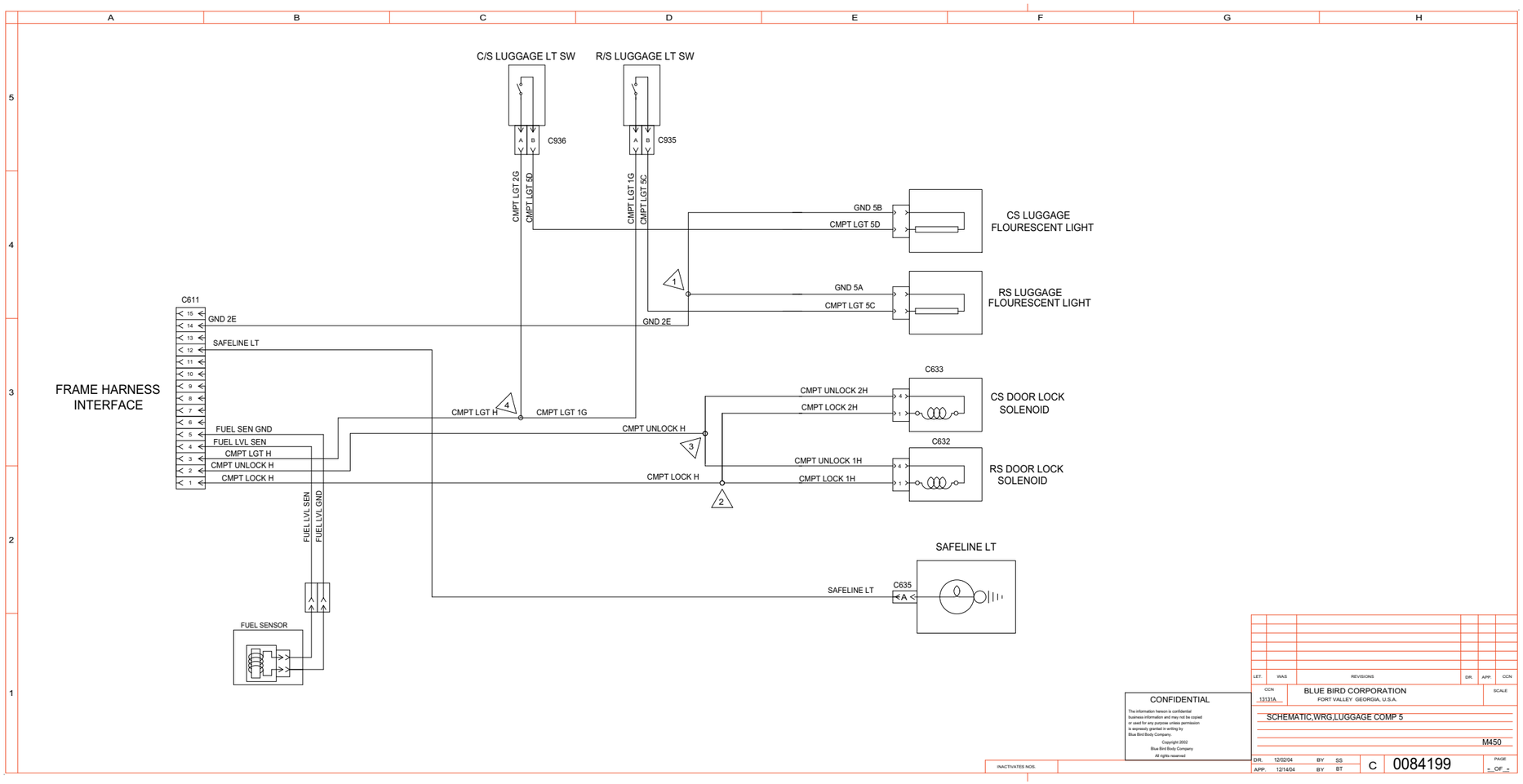

Wiring Schematic 0086141 - Dash/A/C/Controls

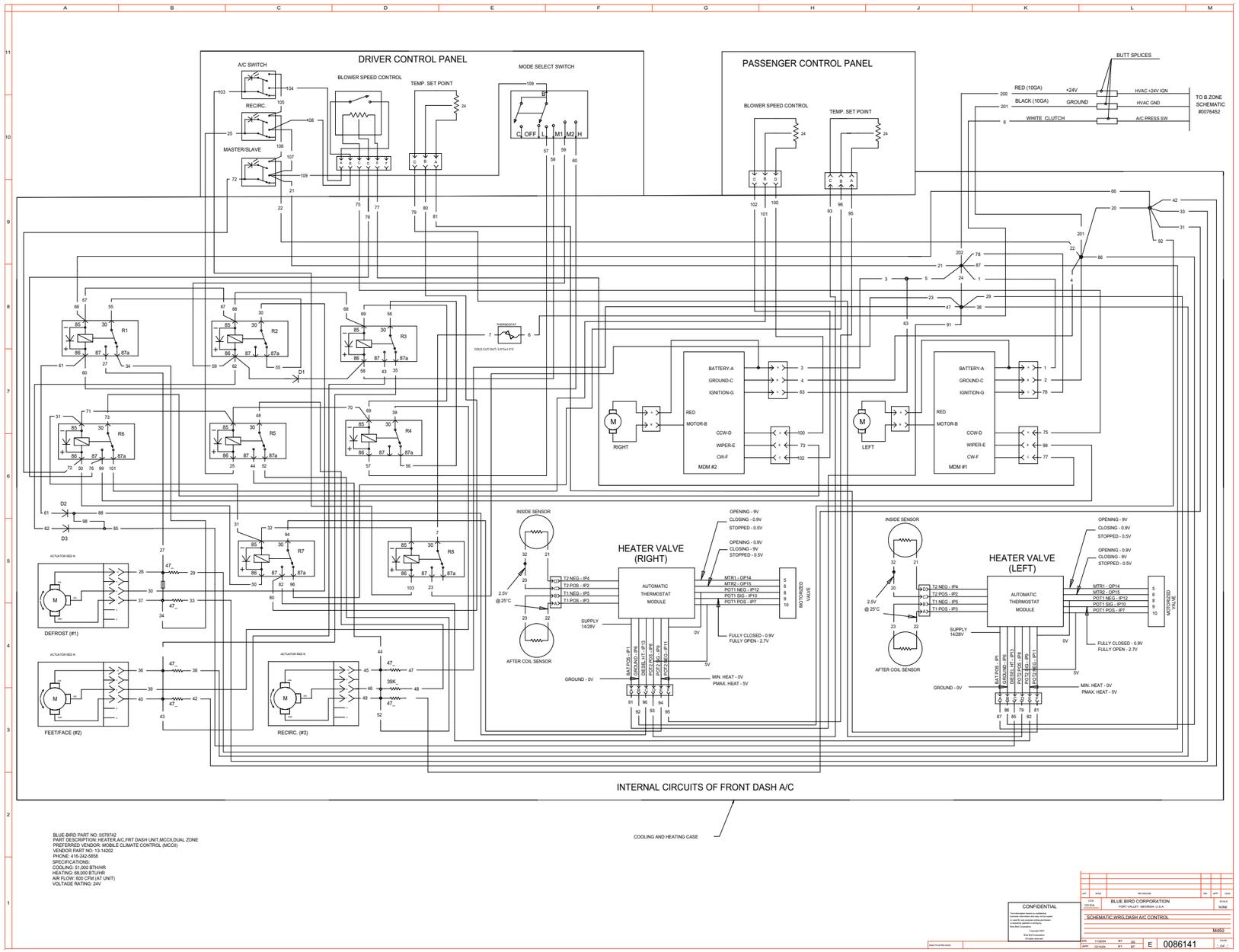

Wiring Schematic 0086141 - Dash/A/C/Controls - Exploded View A

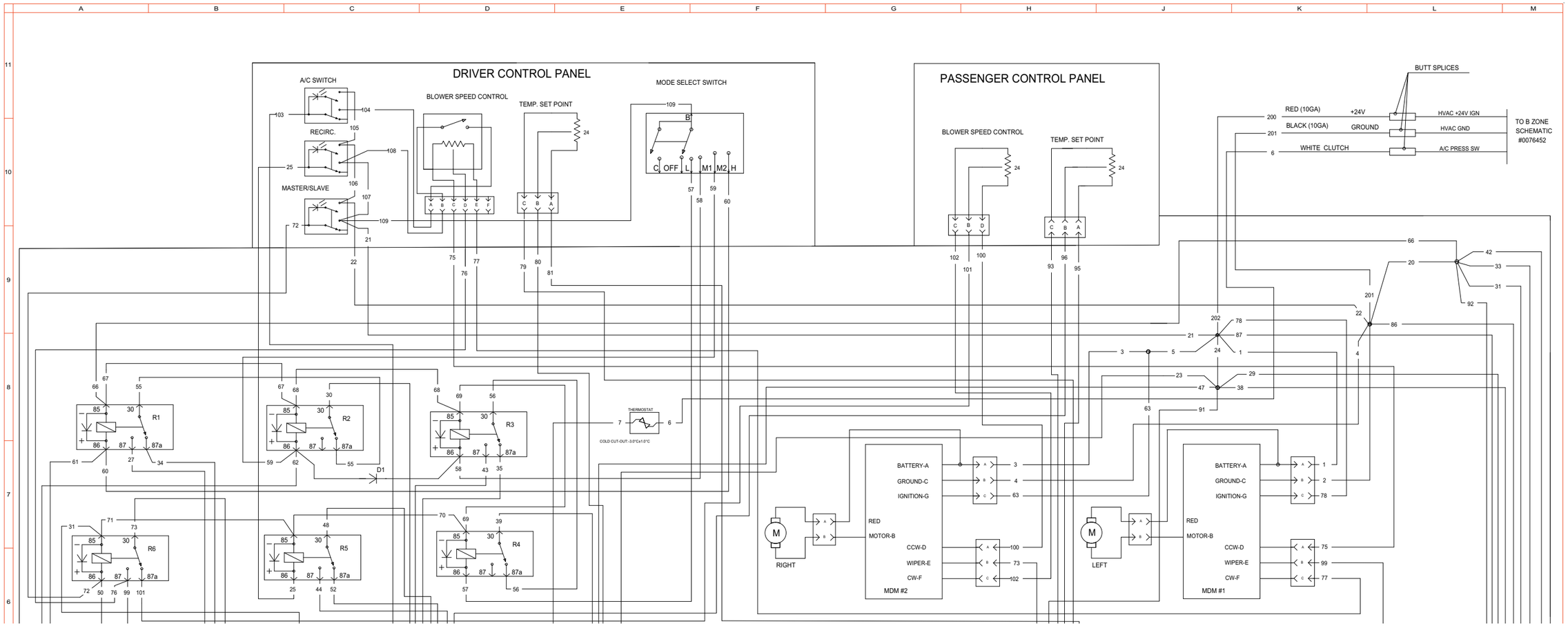

Wiring Schematic 0086141 - Dash / AC Controls

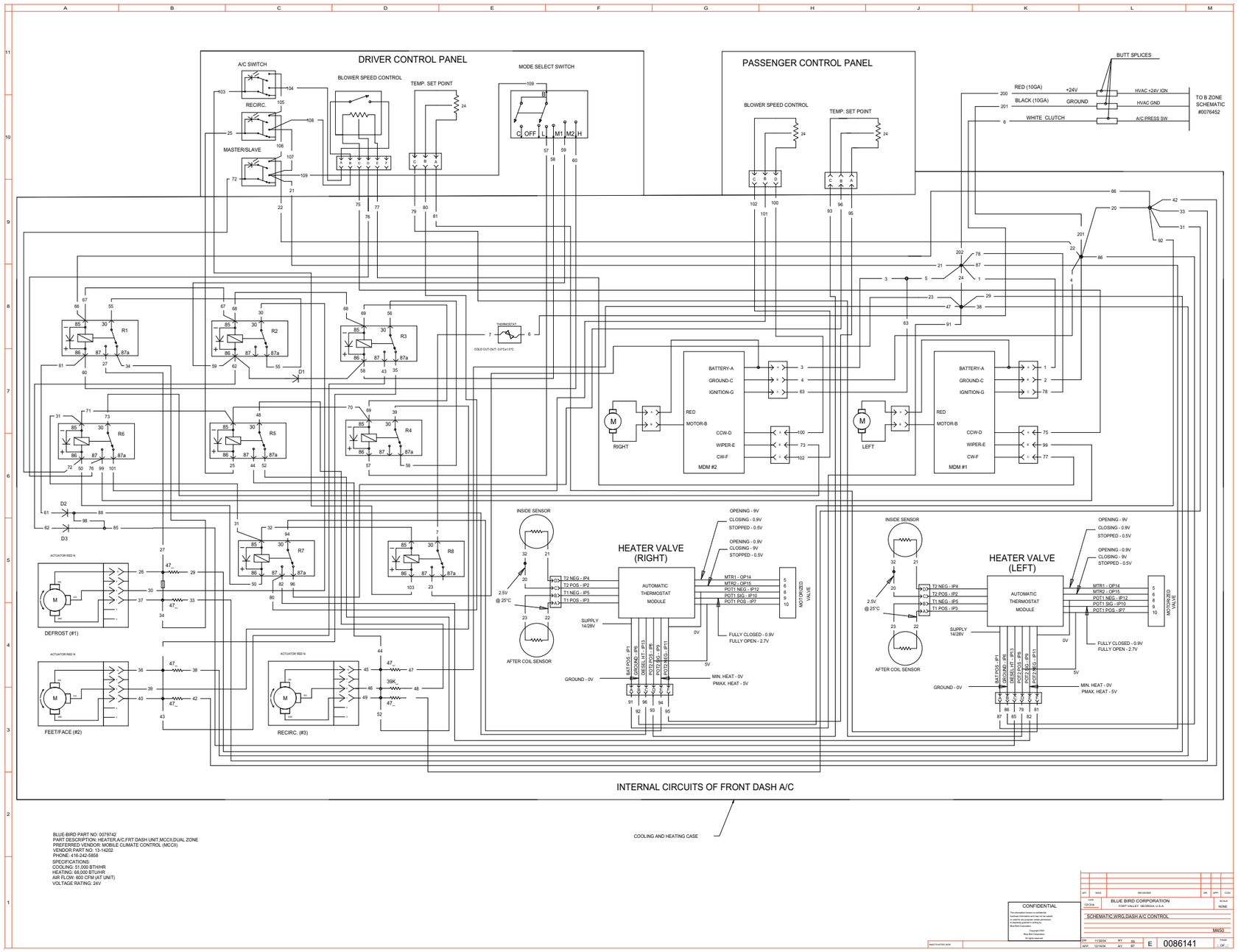

Wiring Schematic 0078072 - Tail Lights

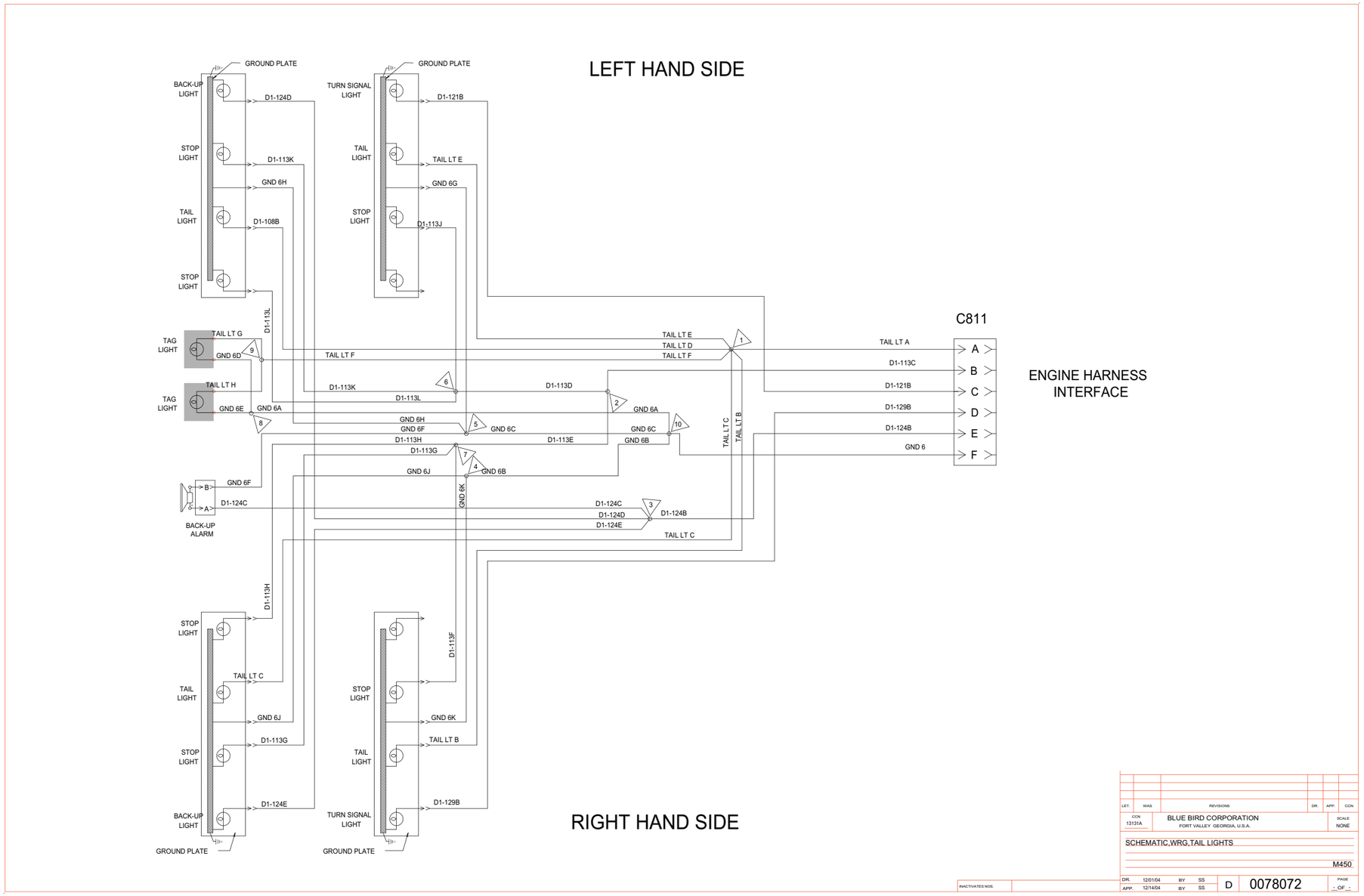

Wiring Schematic 0075992 - Transmission

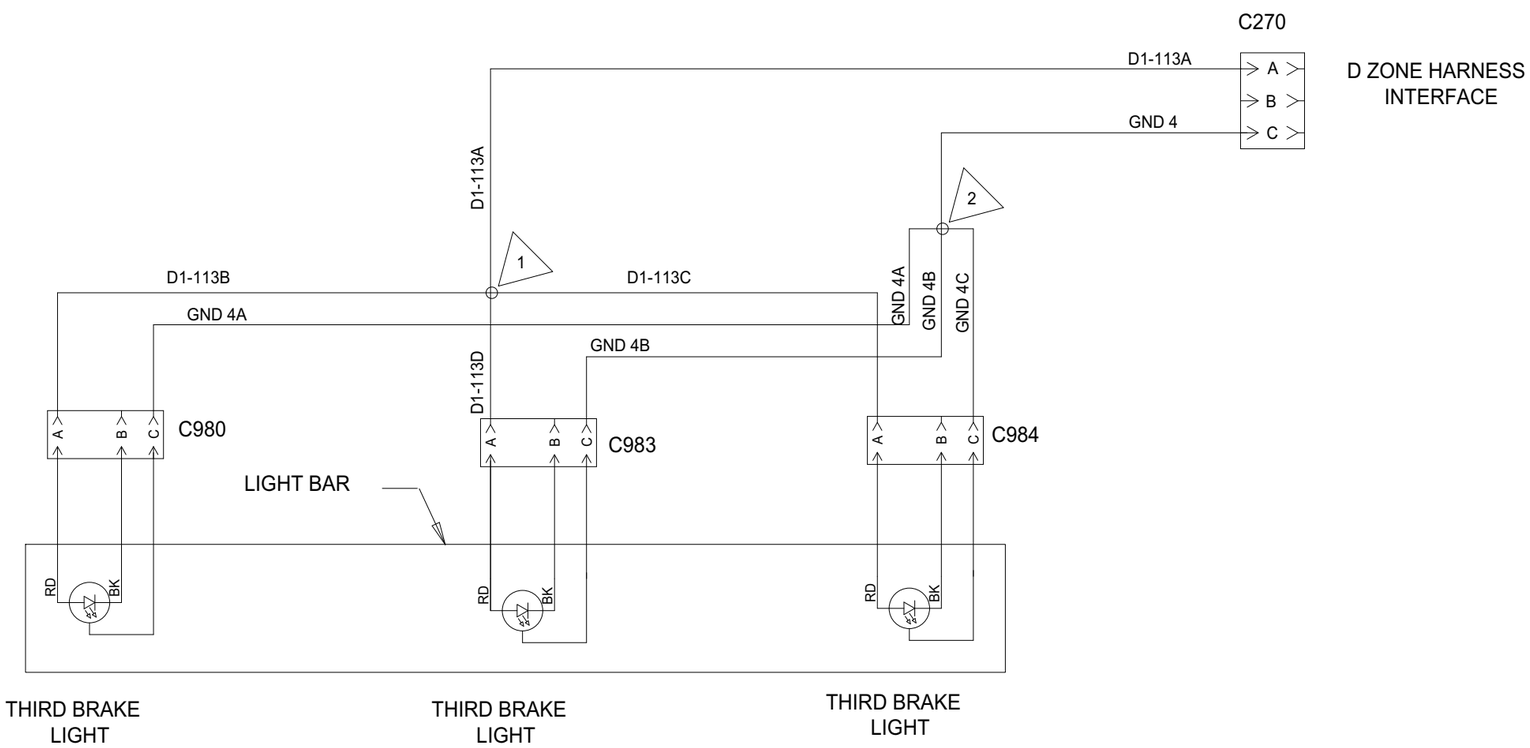

LET.	WAS	REVISIONS	DR.	APP.	CCN

CCN	BLUE BIRD CORPORATION	SCALE
13131A	FORT VALLEY GEORGIA, U.S.A.	NONE

SCHEMATIC,WRG,BRAKE LIGHTS

M450

INACTIVATES NOS.		DR.	12/02/04	BY	SS	B	0075992	PAGE
		APP.	12/14/04	BY	BT			_ OF _

Wiring Schematic 0102063 - Transmission

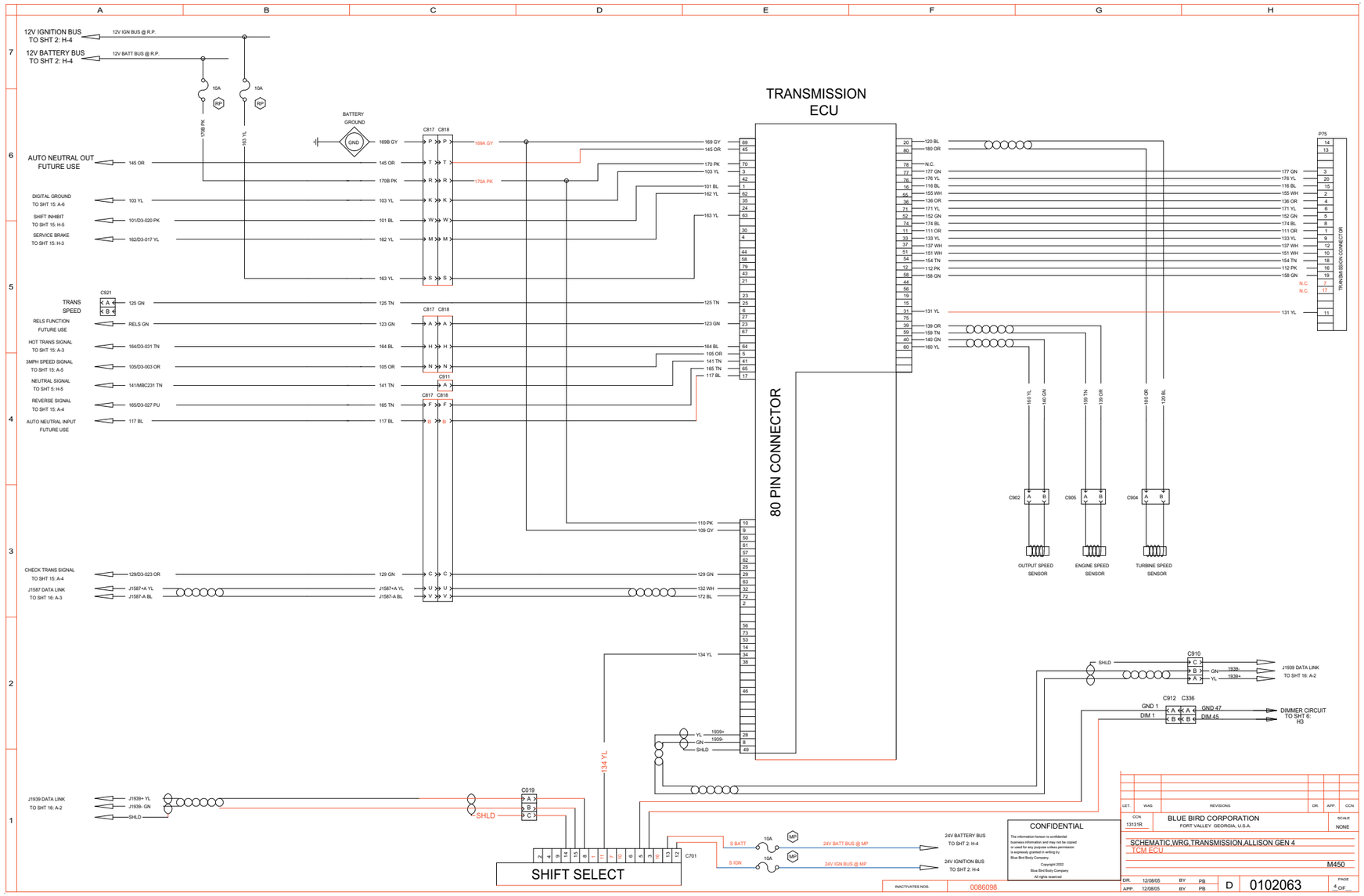

Wiring Schematic 0086078 - Engine Compartment Lights

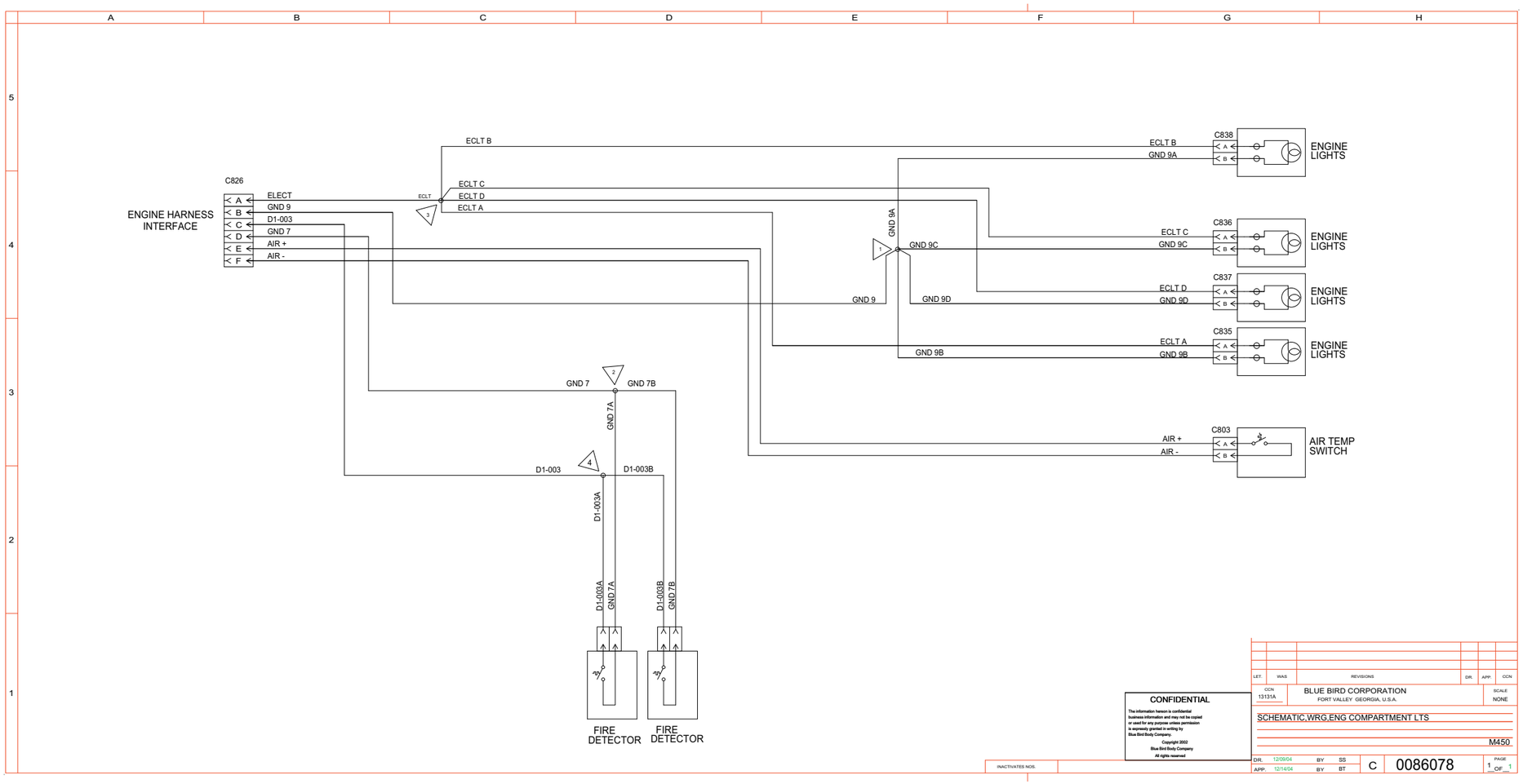

Wiring Schematic 0086777 - Webasto, Hydronic Control System

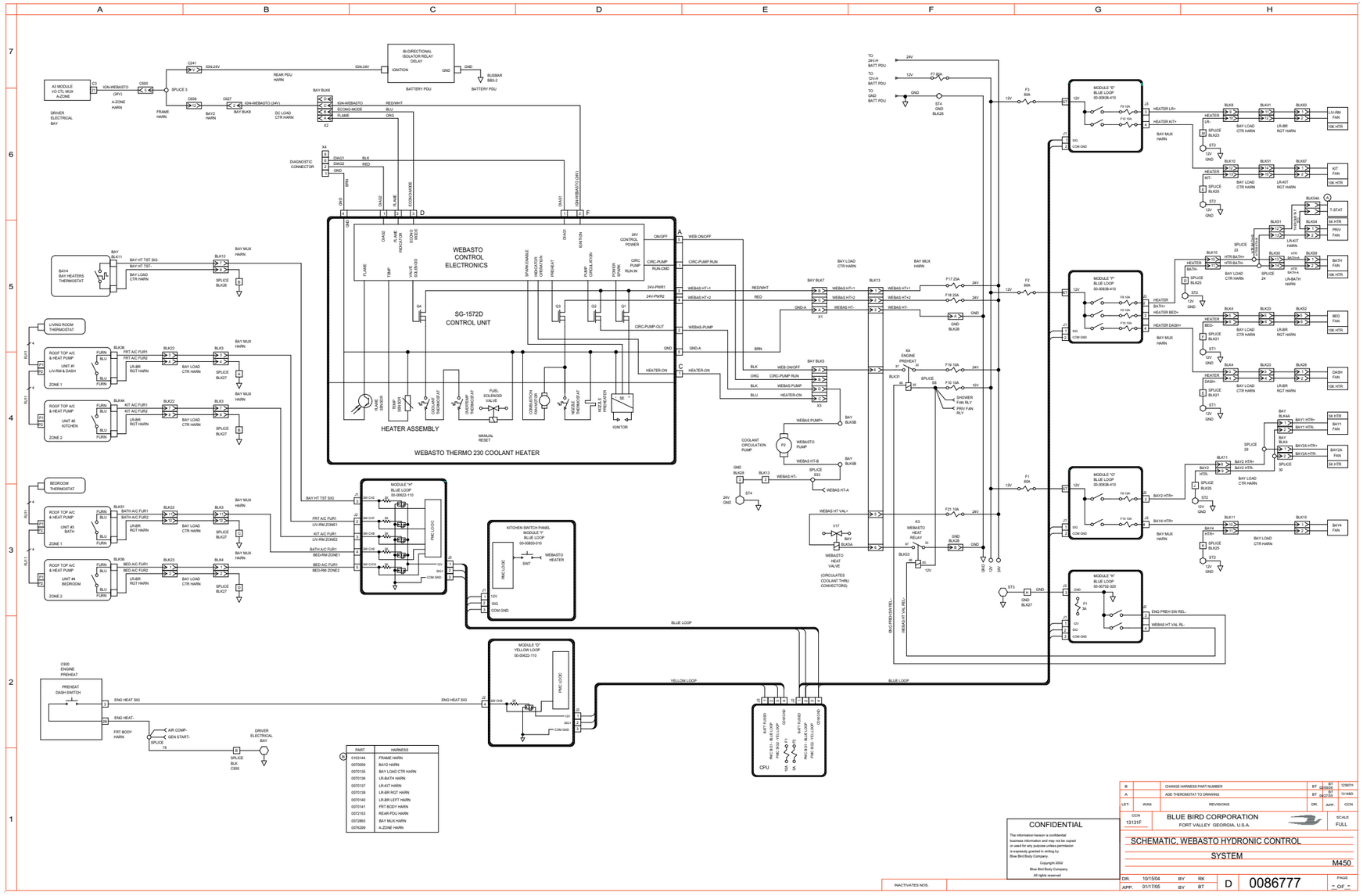

Wiring Schematic 0086777 - Webasto, Hydronic Control System - **Exploded View A**

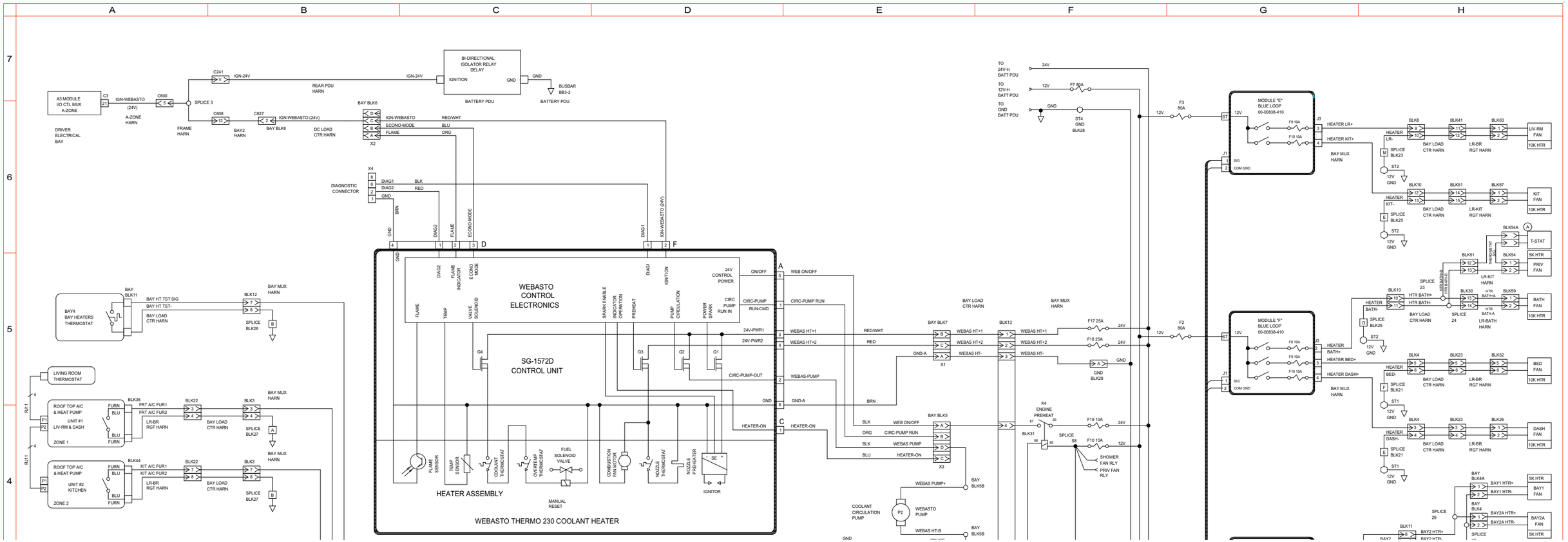

Wiring Schematic 0086777 - Webasto, Hydronic Control System - **Exploded View B**

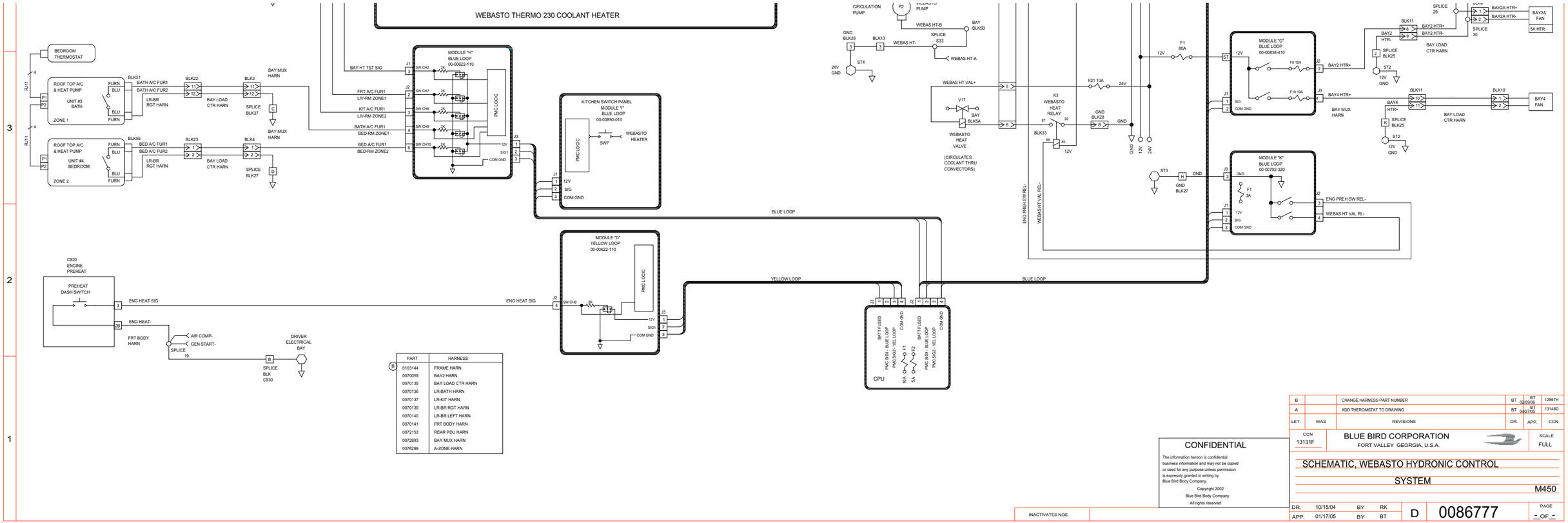

PART	HARNESS
0103144	FRAME HARN
0070059	BAY2 HARN
0070135	BAY LOAD CTR HARN
0070136	LR-BATH HARN
0070137	LR-KIT HARN
0070139	LR-BR RGT HARN
0070140	LR-BR LEFT HARN
0070141	FRT BODY HARN
0072153	REAR PDU HARN
0072893	BAY MUX HARN
0076299	A-ZONE HARN

LET.	WAS	REVISIONS	DR.	APP.	CCN
B		CHANGE HARNESS PART NUMBER	BT	BT 02/09/06	12997H
A		ADD THEROMSTAT TO DRAWING	BT	BT 04/27/05	13148D

CONFIDENTIAL

The information hereon is confidential business information and may not be copied or used for any purpose unless permission is expressly granted in writing by Blue Bird Body Company.

Copyright 2002
Blue Bird Body Company
All rights reserved

INACTIVATES NOS.

CCN 13131F

BLUE BIRD CORPORATION
FORT VALLEY GEORGIA, U.S.A.

SCALE FULL

SCHEMATIC, WEBASTO HYDRONIC CONTROL SYSTEM

M450

DR. 10/15/04 BY RK
APP. 01/17/05 BY BT

D 0086777

PAGE - OF -

Wiring Schematic 0086778 - Engine, Dash, Webasto Heating System - Page 1 of 2

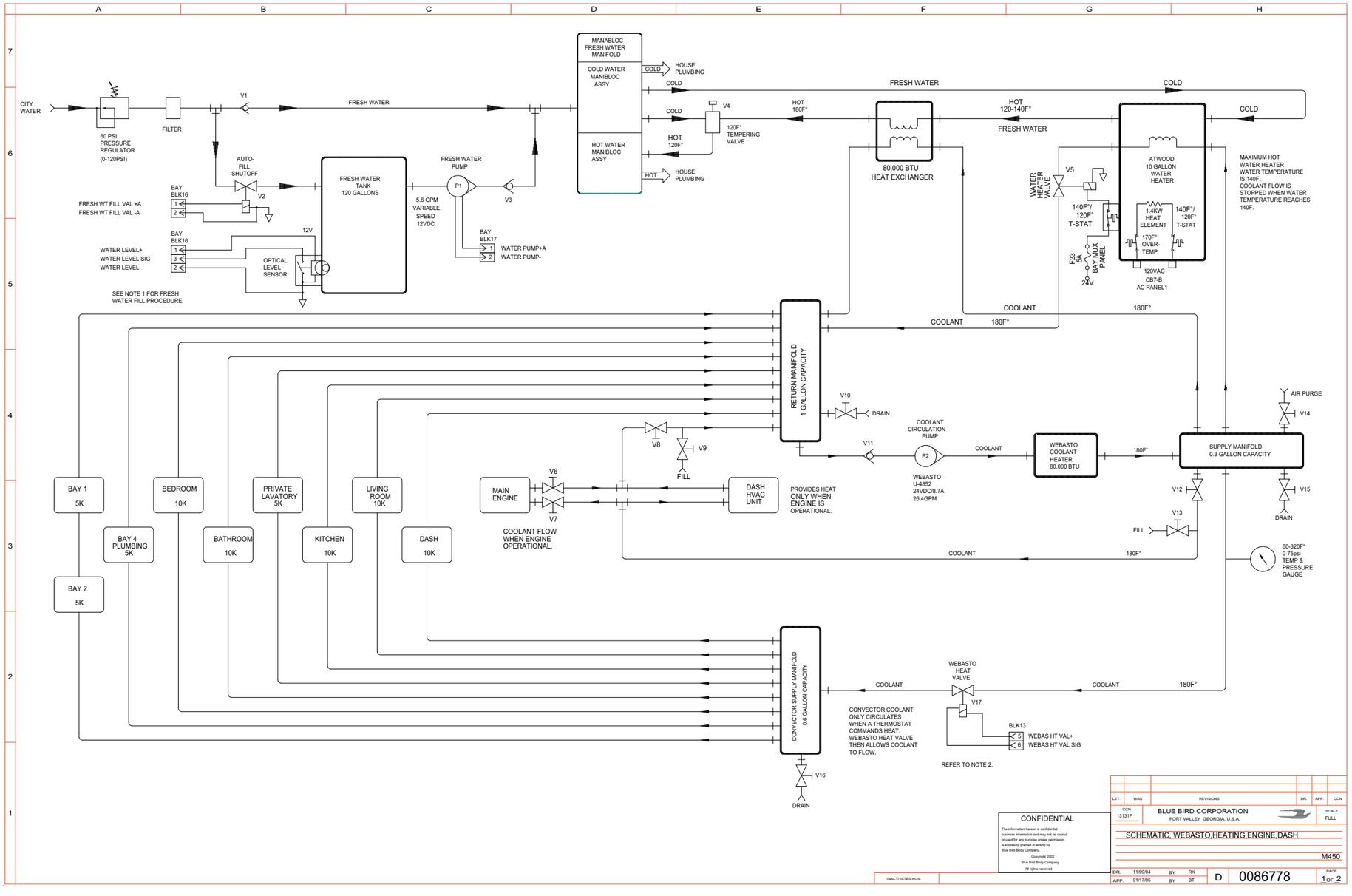

Wiring Schematic 0086778 - Engine, Dash, Webasto Heating System - Page 2 of 2

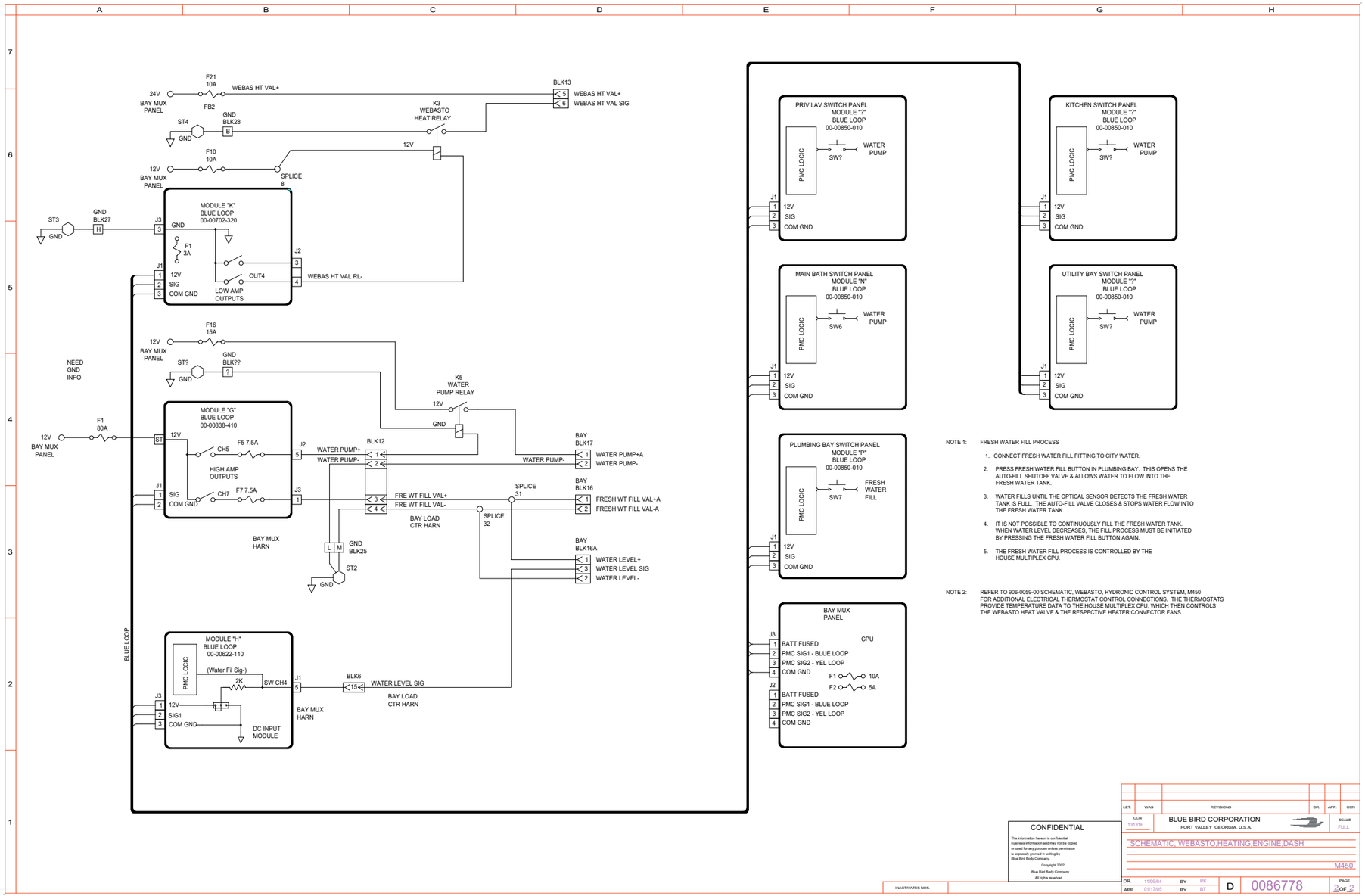

NOTE 1: FRESH WATER FILL PROCESS

1. CONNECT FRESH WATER FILL FITTING TO CITY WATER.
2. PRESS FRESH WATER FILL BUTTON IN PLUMBING BAY. THIS OPENS THE AUTO-FILL SHUTOFF VALVE & ALLOWS WATER TO FLOW INTO THE FRESH WATER TANK.
3. WATER FILLS UNTIL THE OPTICAL SENSOR DETECTS THE FRESH WATER TANK IS FULL. THE AUTO-FILL VALVE CLOSES & STOPS WATER FLOW INTO THE FRESH WATER TANK.
4. IT IS NOT POSSIBLE TO CONTINUOUSLY FILL THE FRESH WATER TANK. WHEN WATER LEVEL DECREASES, THE FILL PROCESS MUST BE INITIATED BY PRESSING THE FRESH WATER FILL BUTTON AGAIN.
5. THE FRESH WATER FILL PROCESS IS CONTROLLED BY THE HOUSE MULTIPLEX CPU.

NOTE 2: REFER TO 906-0059-00 SCHEMATIC, WEBASTO, HYDRONIC CONTROL SYSTEM, M450 FOR ADDITIONAL ELECTRICAL THERMOSTAT CONTROL CONNECTIONS. THE THERMOSTATS PROVIDE TEMPERATURE DATA TO THE HOUSE MULTIPLEX CPU, WHICH THEN CONTROLS THE WEBASTO HEAT VALVE & THE RESPECTIVE HEATER CONVECTOR FANS.

CONFIDENTIAL
The information hereon is confidential business information and may not be copied or used for any purpose unless permission is expressly granted in writing by Blue Bird Body Company.
Copyright 2002
Blue Bird Body Company
All rights reserved

LET. WAS REVISIONS DR. APP. CCN

CCN 13131F — BLUE BIRD CORPORATION, FORT VALLEY GEORGIA, U.S.A. — SCALE FULL

SCHEMATIC, WEBASTO,HEATING,ENGINE,DASH

M450

DR. 11/09/04 BY RK — APP. 01/17/05 BY BT — D — 0086778 — PAGE 2 OF 2

INACTIVATES NOS.

Wiring Schematic 0086762 - Living Room, Kitchen, Slide-Out, Bath, Floorplan A

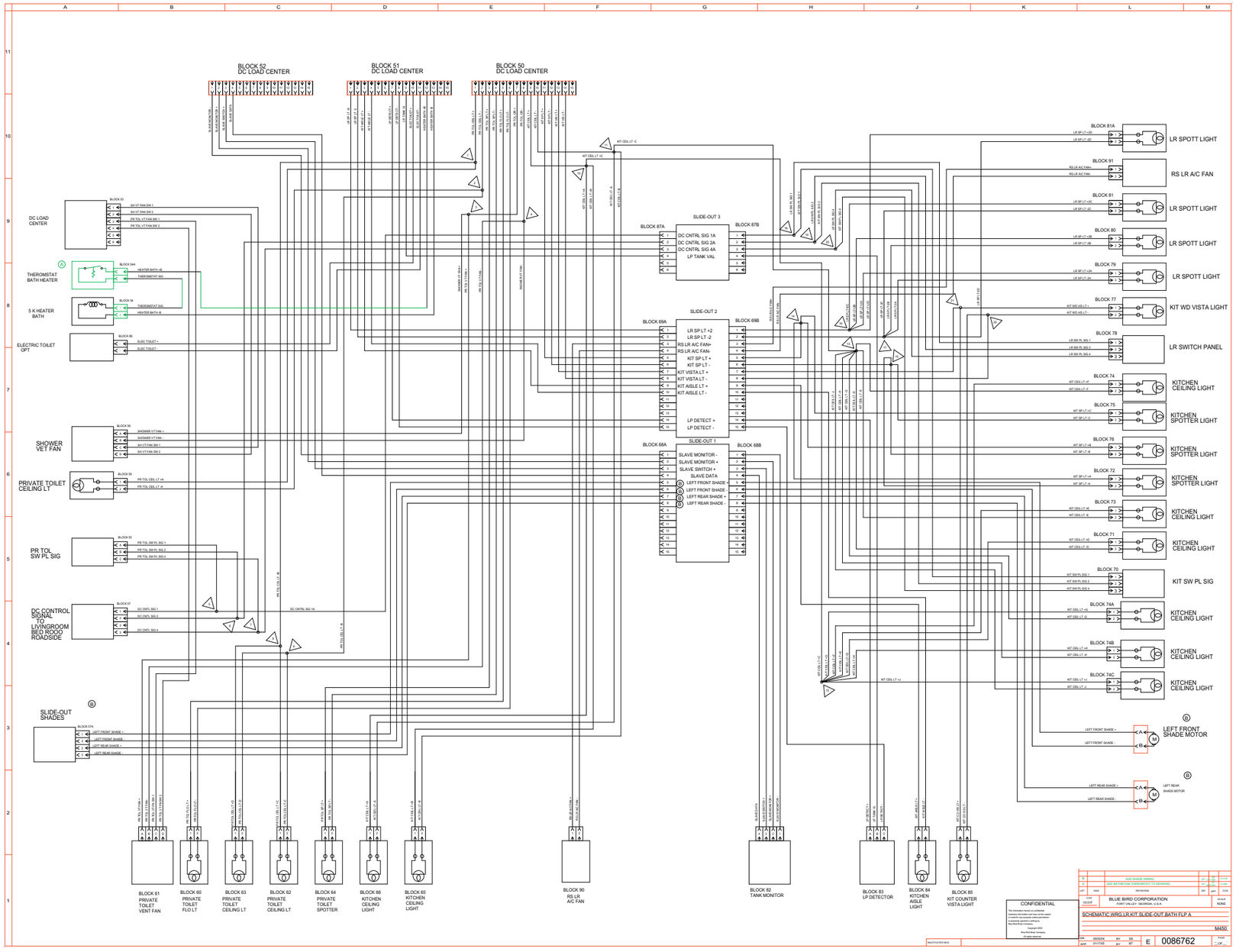

Wiring Schematic 0086762 - Living Room, Kitchen, Slide-Out, Bath, Floorplan A - **Exploded View A**

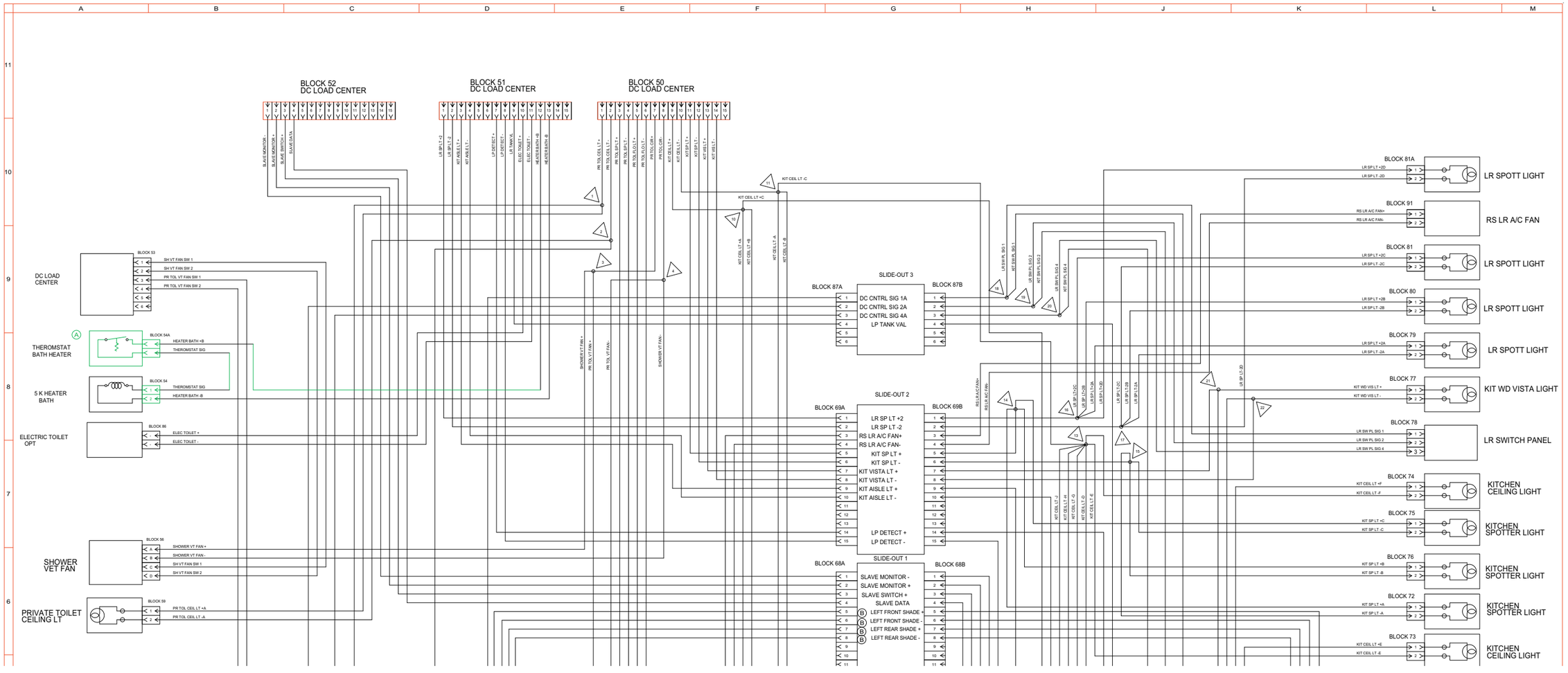

Wiring Schematic 0086762 - Living Room, Kitchen, Slide-Out, Bath, Floorplan A - **Exploded View B**

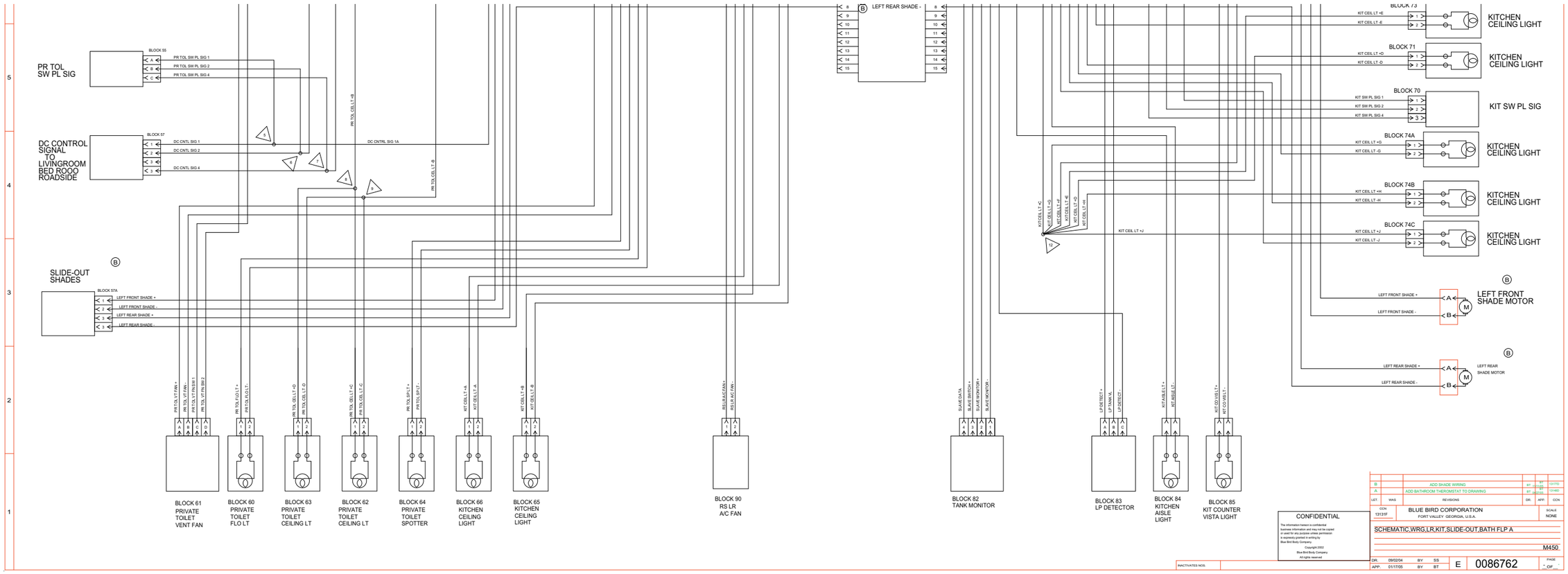

Wiring Schematic 0086763 - Living Room, Kitchen, Slide-Out, Bath, Floorplan B

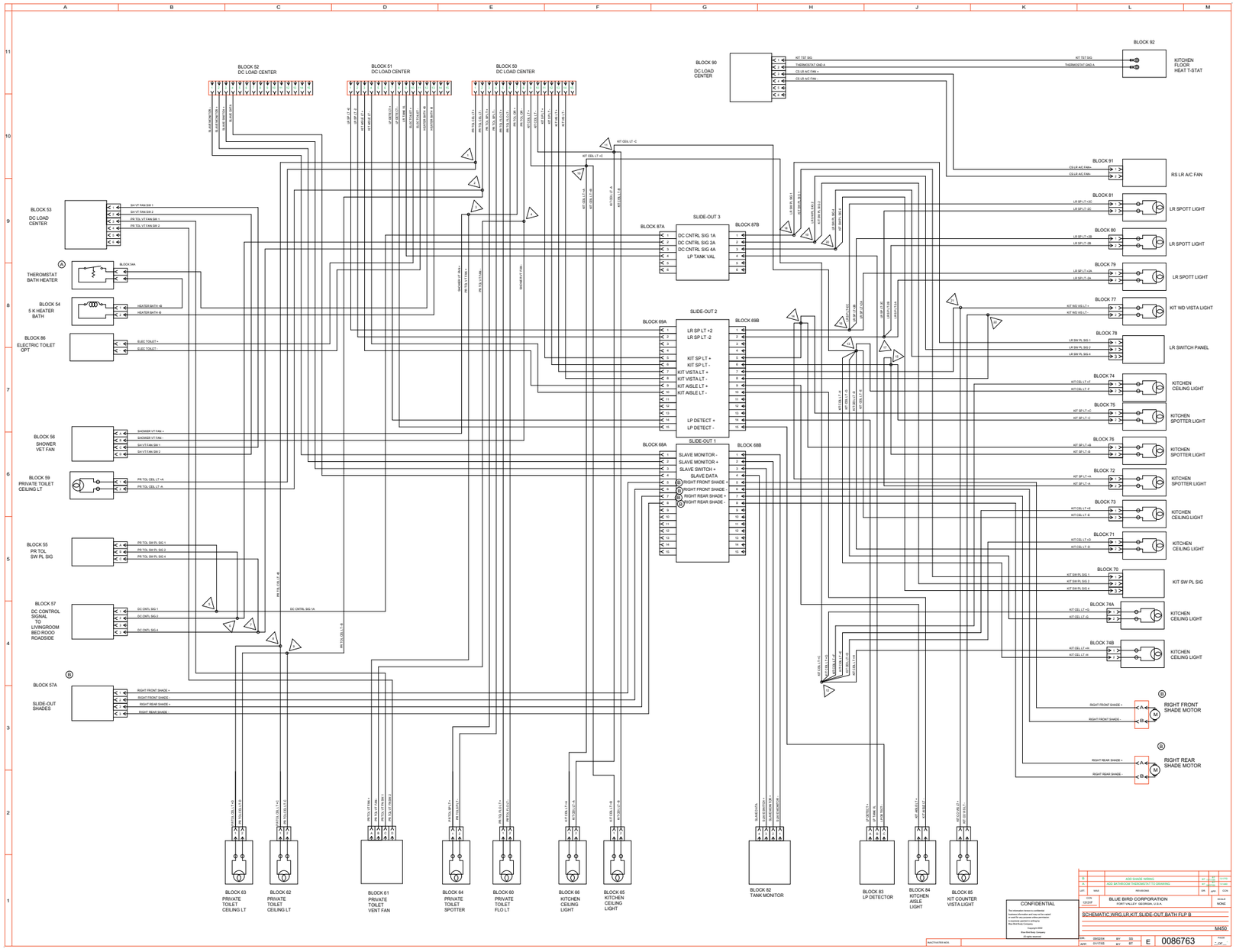

Wiring Schematic 0086763 - Living Room, Kitchen, Slide-Out, Bath, Floorplan B - **Exploded View A**

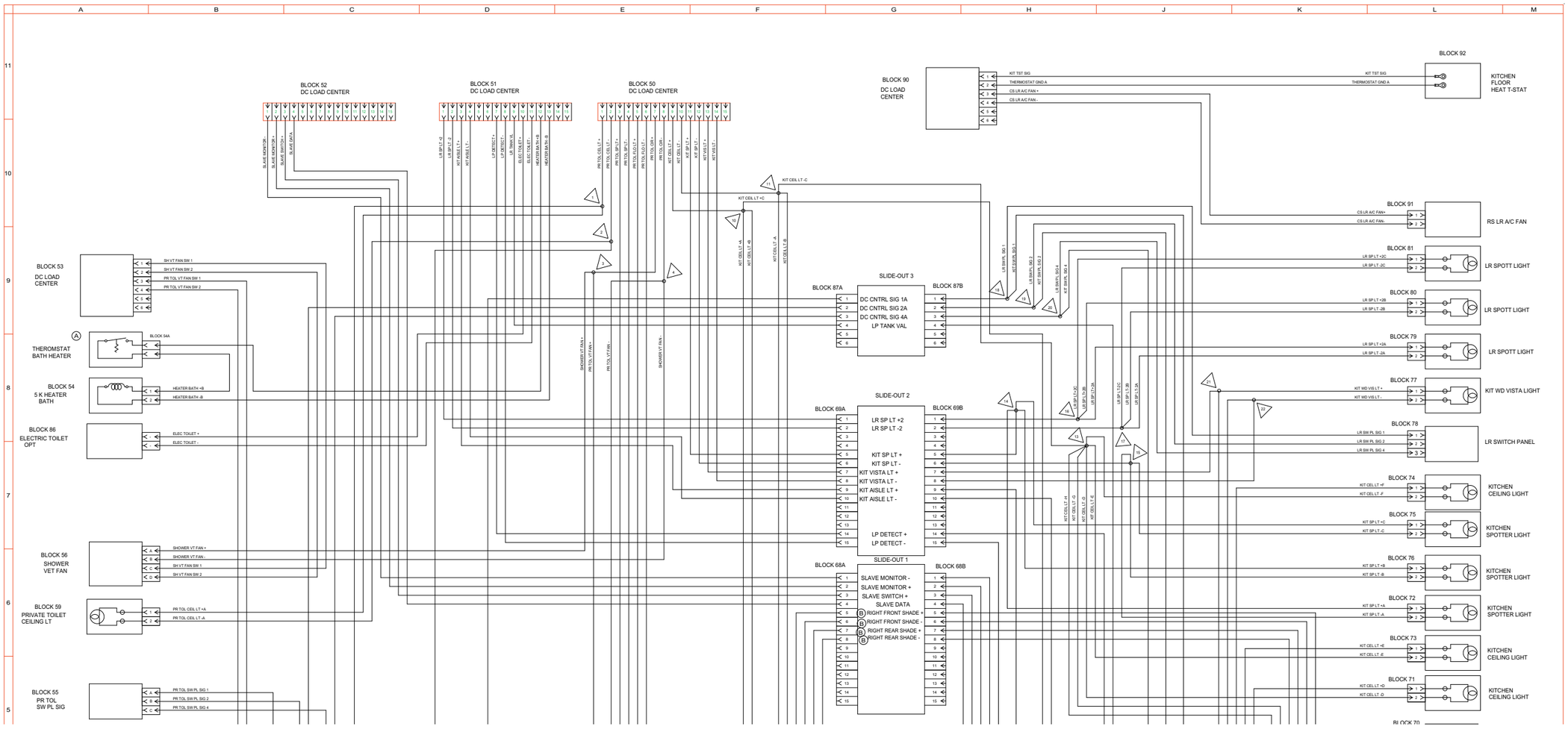

Wiring Schematic 0086763 - Living Room, Kitchen, Slide-Out, Bath, Floorplan B - **Exploded View B**

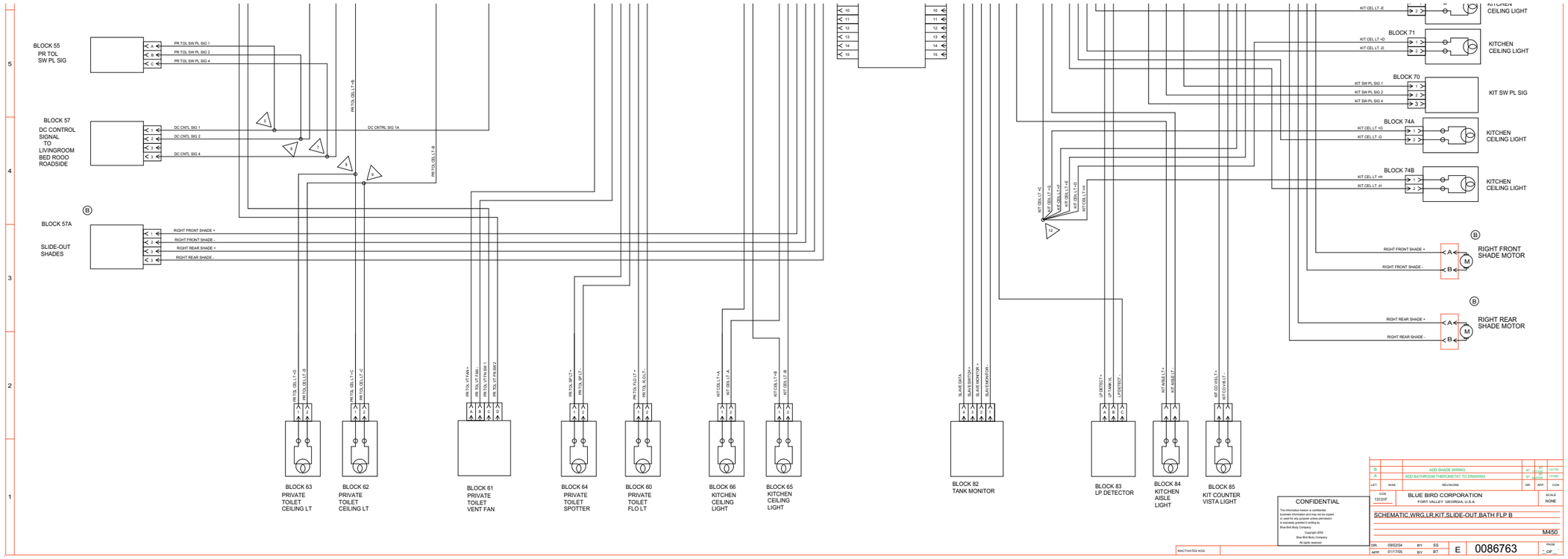

Wiring Schematic 0095819 - 120Vac, Power Distribution/EMS, Floorplan B - Page 1 of 2

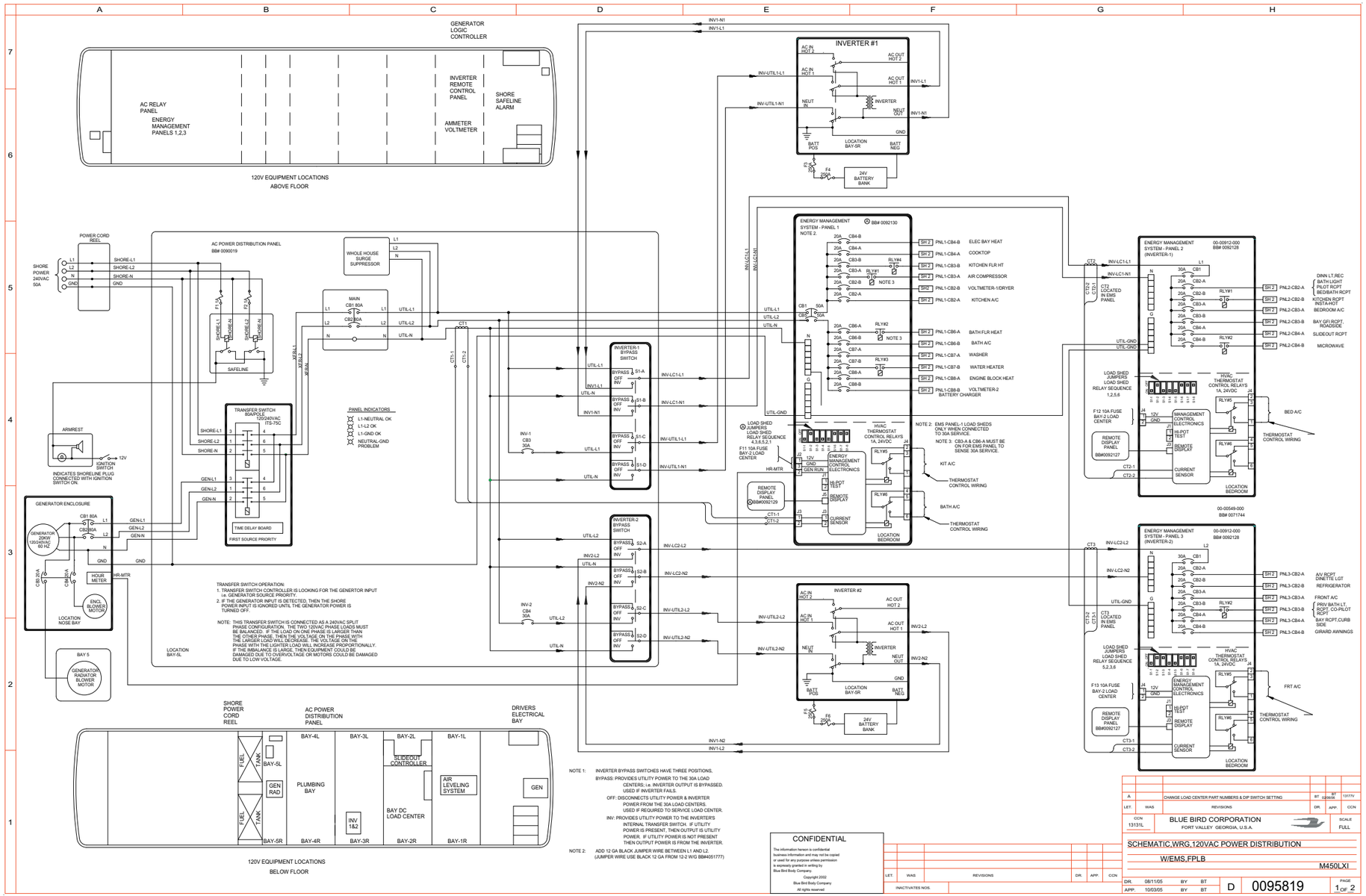

Wiring Schematic 0095819 - 120Vac, Power Distribution/EMS, Floorplan B - Page 2 of 2

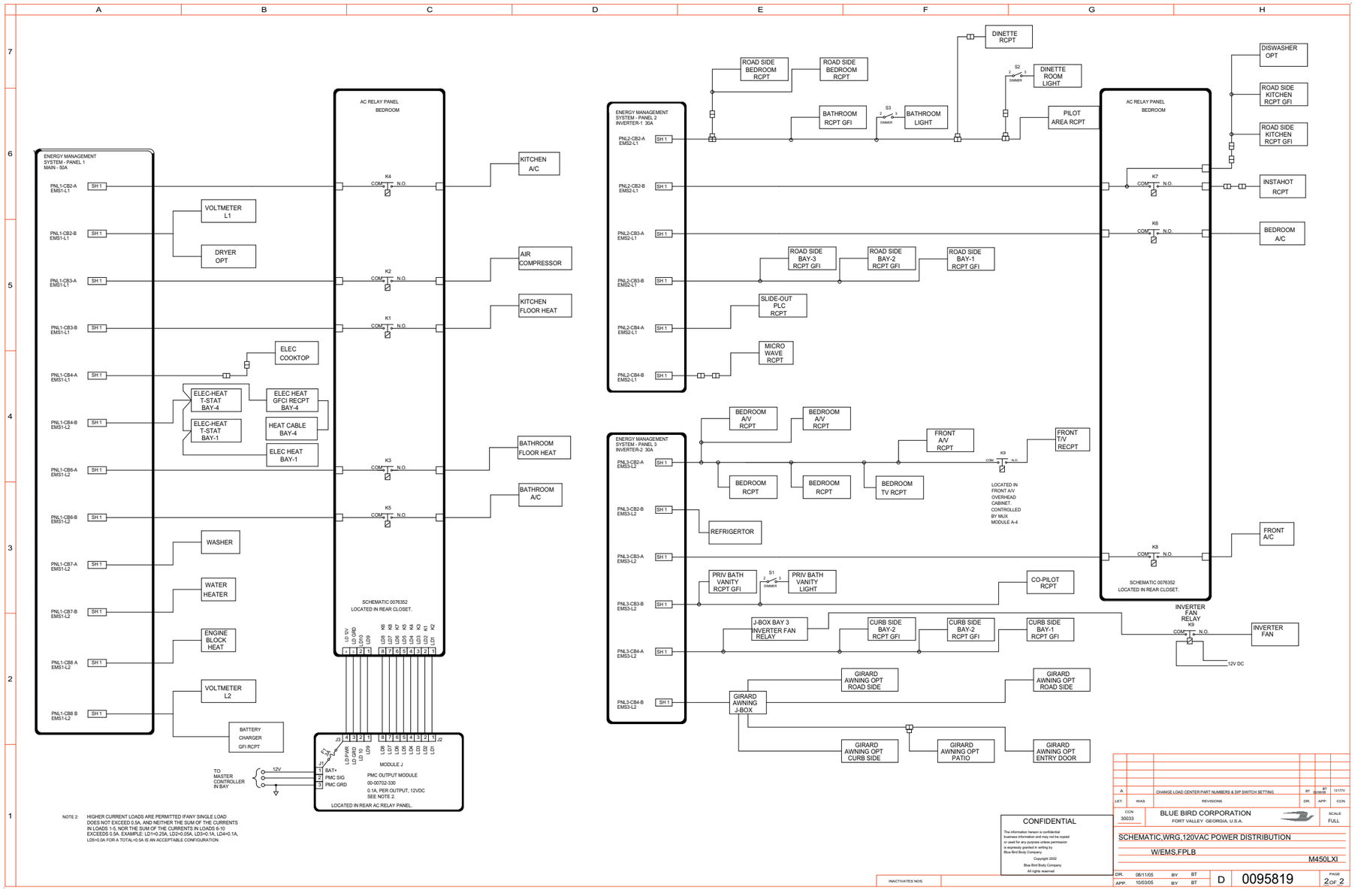

Wiring Schematic 0095819 - 120Vac, Power Distribution/EMS, Floorplan B - Page 2 of 2 - **Exploded View A**

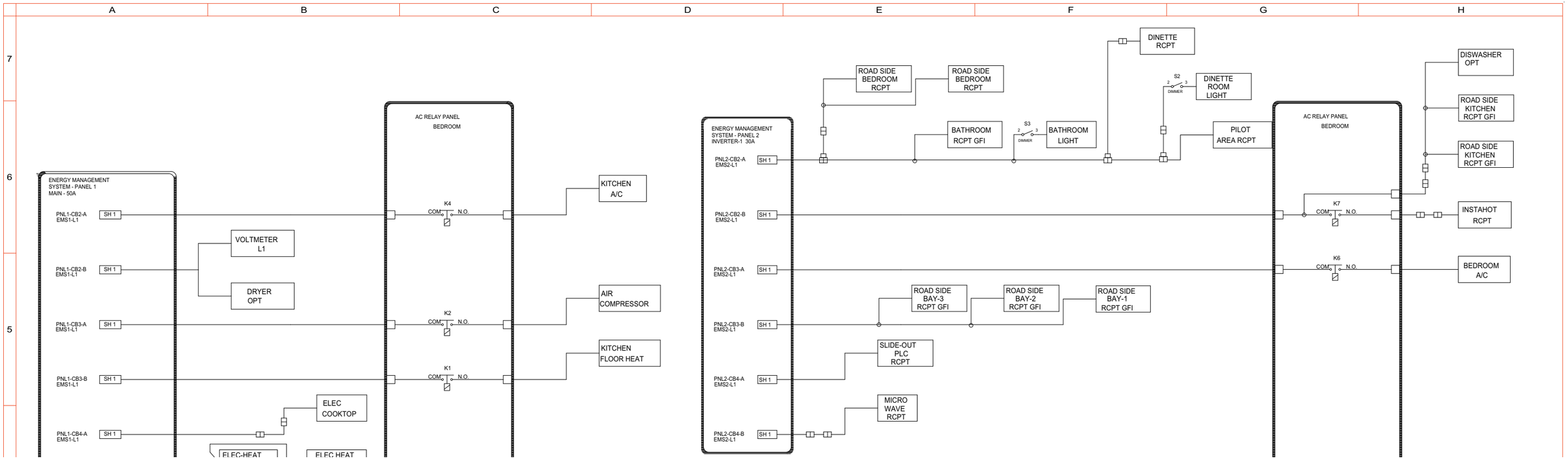

Wiring Schematic 0095819 - 120Vac, Power Distribution/EMS, Floorplan B - Page 2 of 2 - **Exploded View B**

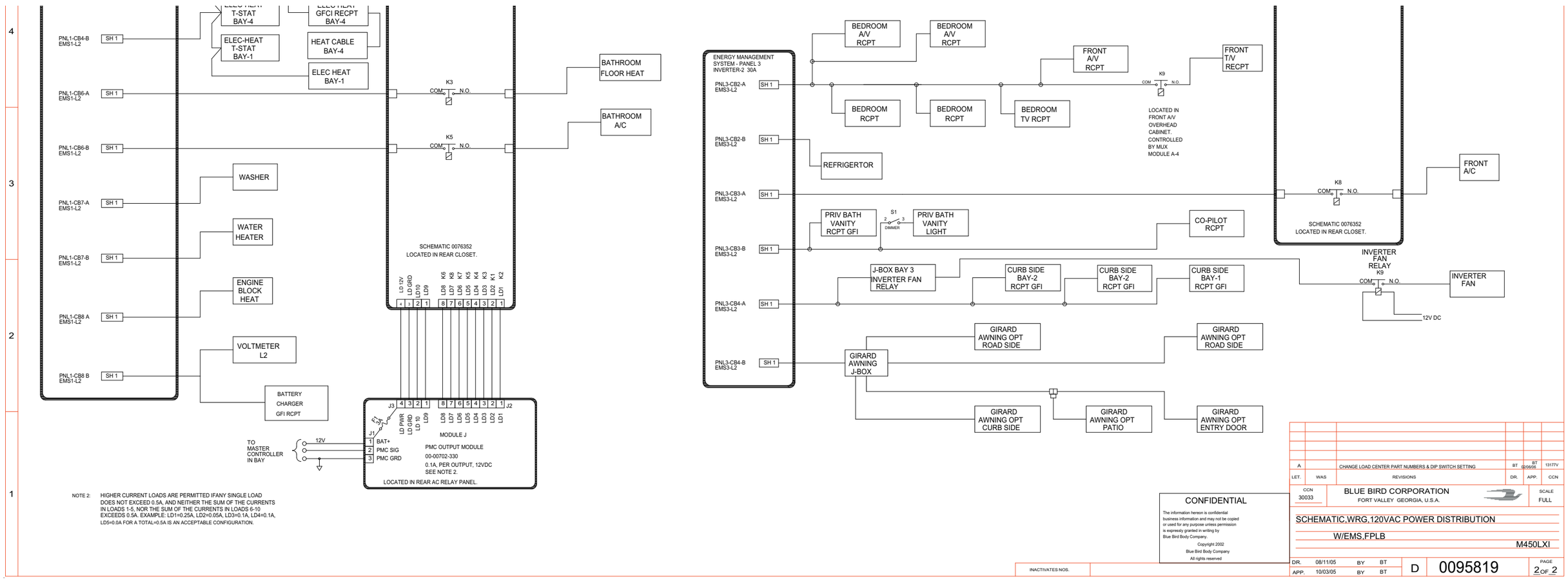

NOTE 2: HIGHER CURRENT LOADS ARE PERMITTED IFANY SINGLE LOAD DOES NOT EXCEED 0.5A, AND NEITHER THE SUM OF THE CURRENTS IN LOADS 1-5, NOR THE SUM OF THE CURRENTS IN LOADS 6-10 EXCEEDS 0.5A. EXAMPLE: LD1=0.25A, LD2=0.05A, LD3=0.1A, LD4=0.1A, LD5=0.0A FOR A TOTAL=0.5A IS AN ACCEPTABLE CONFIGURATION.

CONFIDENTIAL

The information hereon is confidential business information and may not be copied or used for any purpose unless permission is expressly granted in writing by Blue Bird Body Company.

Copyright 2002
Blue Bird Body Company
All rights reserved

INACTIVATES NOS.

LET.	WAS	REVISIONS	DR.	APP.	CCN
A		CHANGE LOAD CENTER PART NUMBERS & DIP SWITCH SETTING	BT	BT 02/06/06	1317/V

CCN 30033

BLUE BIRD CORPORATION
FORT VALLEY GEORGIA, U.S.A.

SCALE FULL

SCHEMATIC,WRG,120VAC POWER DISTRIBUTION
W/EMS,FPLB
M450LXI

DR.	08/11/05	BY	BT	D	0095819
APP.	10/03/05	BY	BT		

PAGE 2 OF 2

Wiring Schematic 0089285 - Schematic, Wiring, Landing Lights

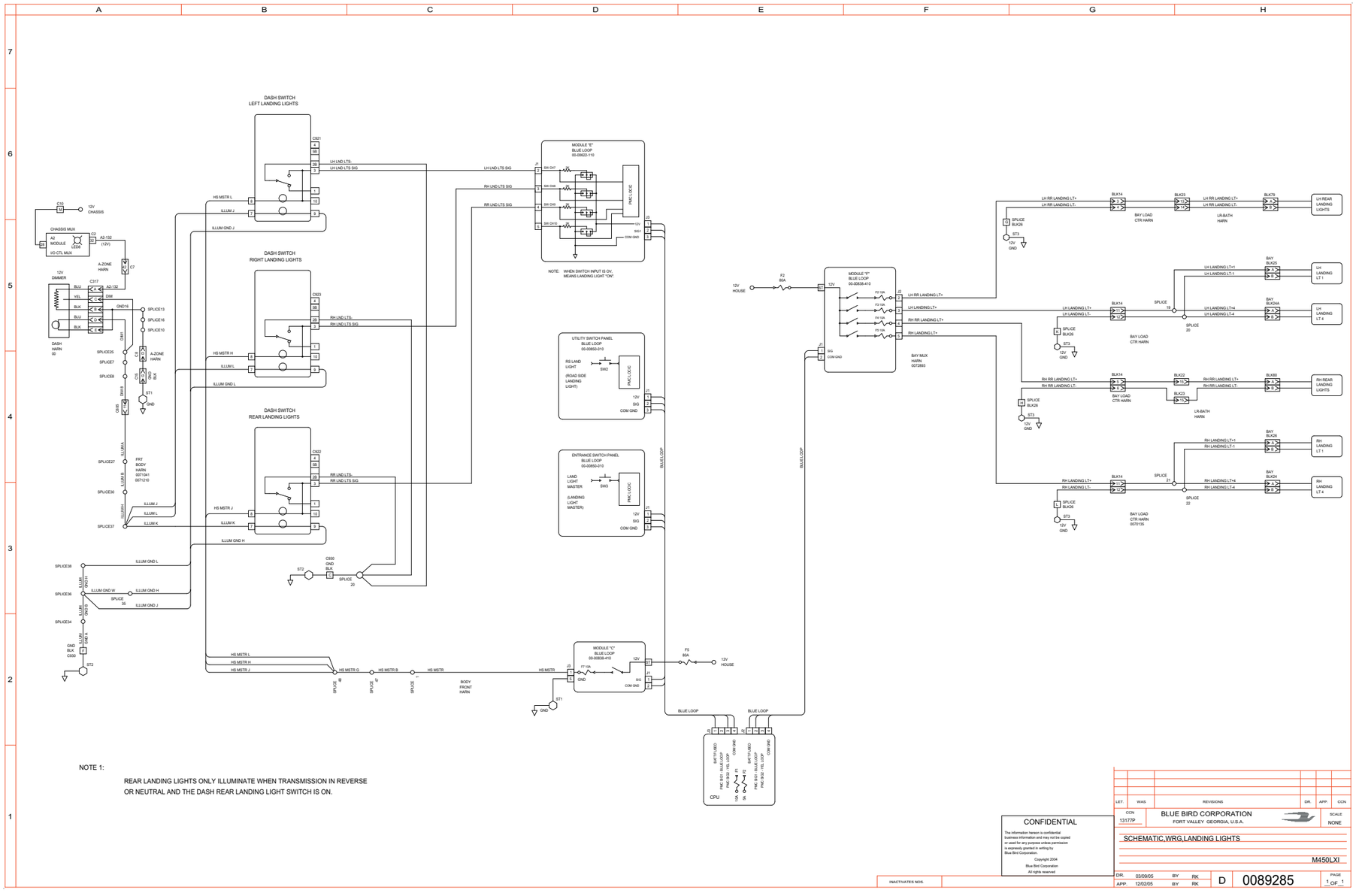

Wiring Schematic 0089321 - Schematic, Wiring, Generator Sys, 120/240Vac - Page 1 of 3

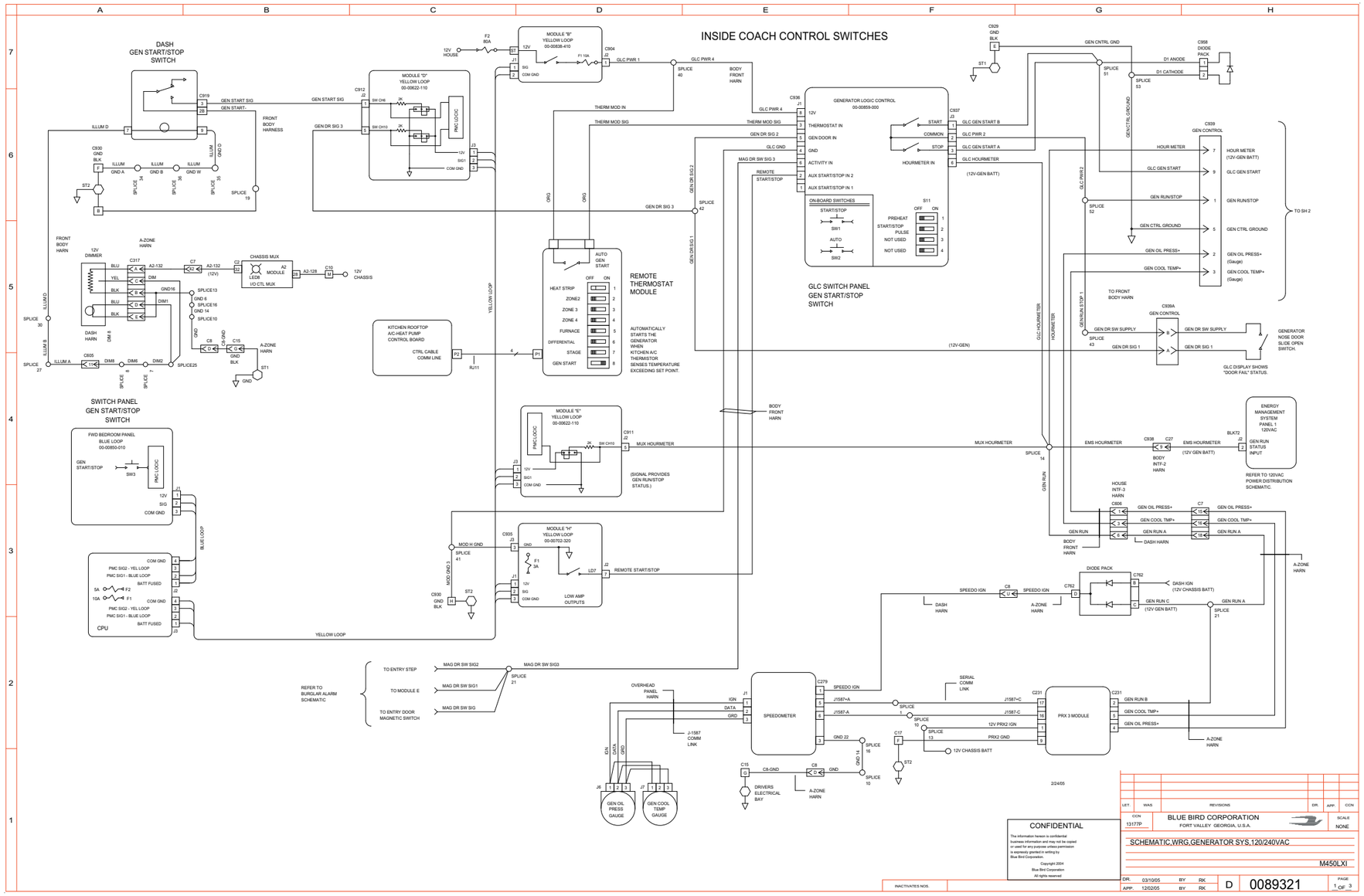

Wiring Schematic 0089321 - Schematic, Wiring, Generator Sys, 120/240Vac - Page 1 of 3 - **Exploded View A**

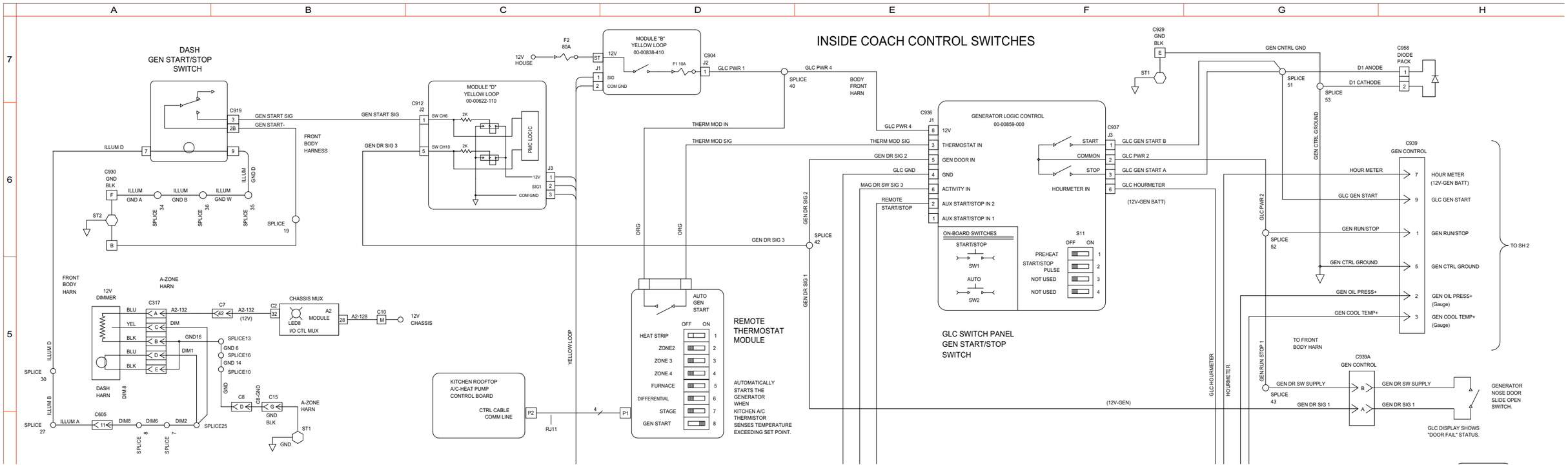

Wiring Schematic 0089321 - Schematic, Wiring, Generator Sys, 120/240Vac - Page 1 of 3 - **Exploded View B**

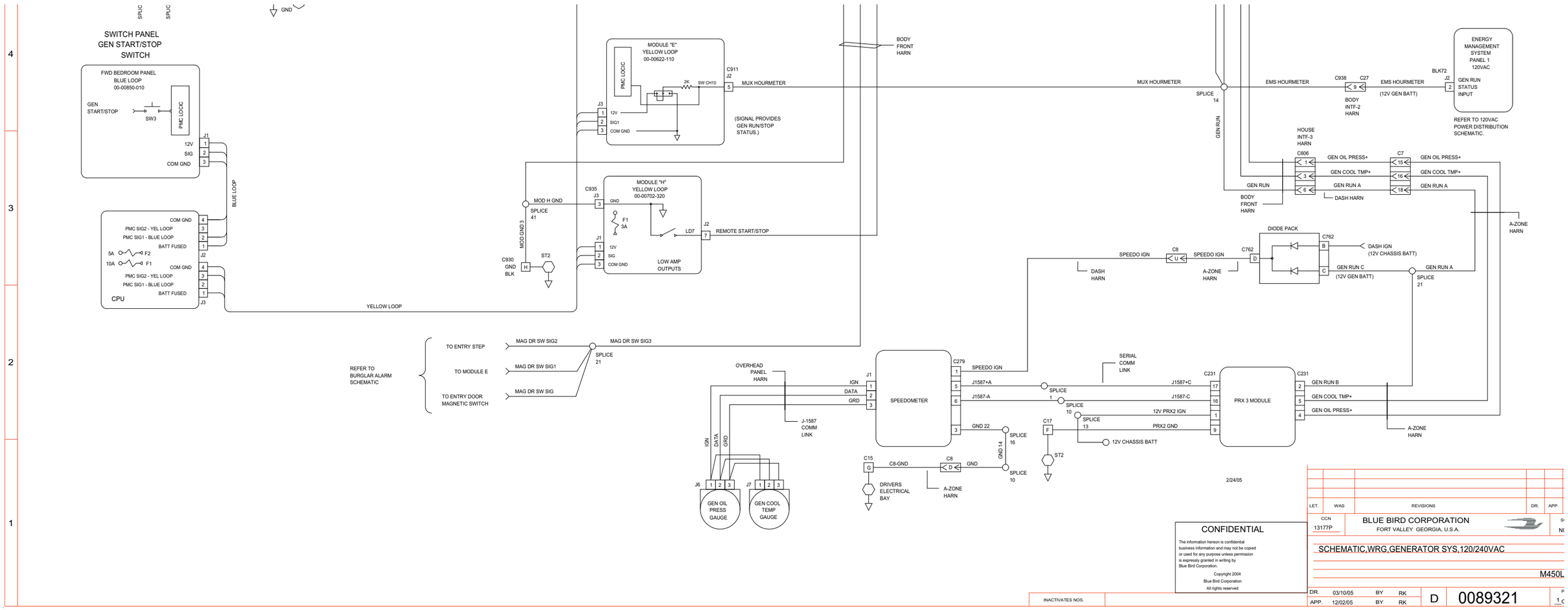

Wiring Schematic 0089321 - Schematic, Wiring, Generator Sys, 120/240Vac - Page 2 of 3

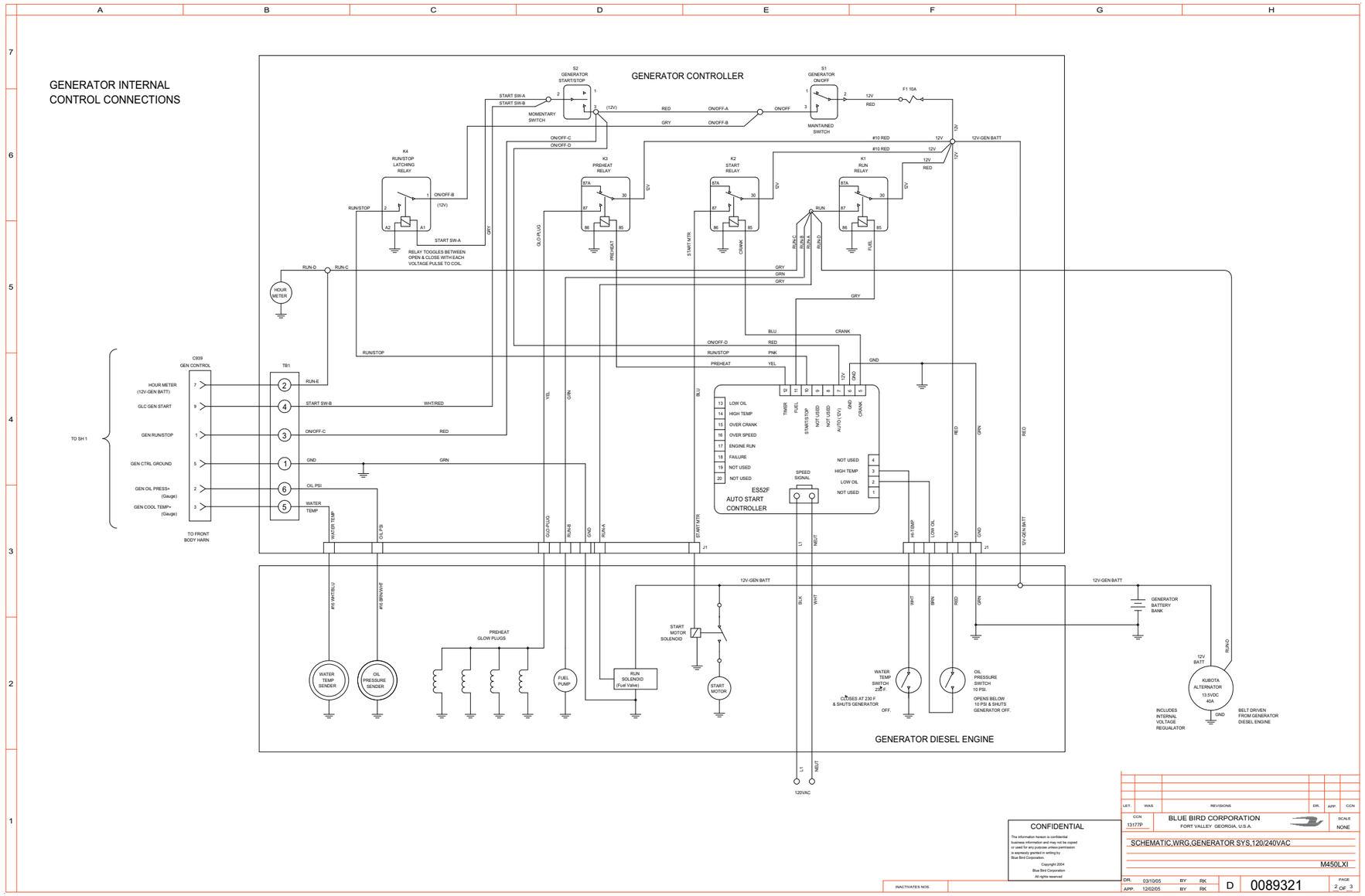

Wiring Schematic 0089321 - Schematic, Wiring, Generator Sys, 120/240Vac - Page 2 of 3 - **Exploded View A**

GENERATOR INTERNAL
CONTROL CONNECTIONS

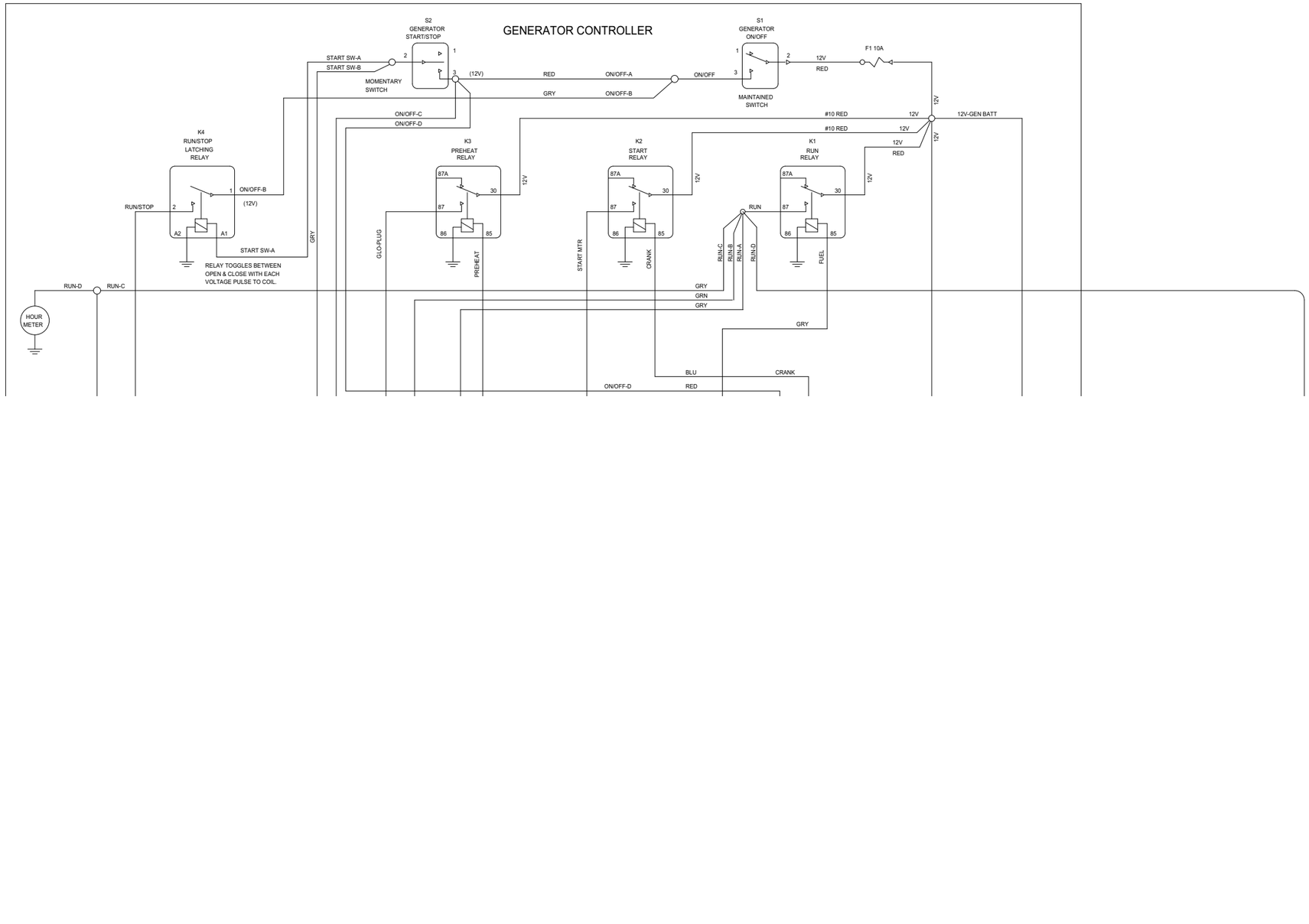

Wiring Schematic 0089321 - Schematic, Wiring, Generator Sys, 120/240Vac - Page 2 of 3 - **Exploded View B**

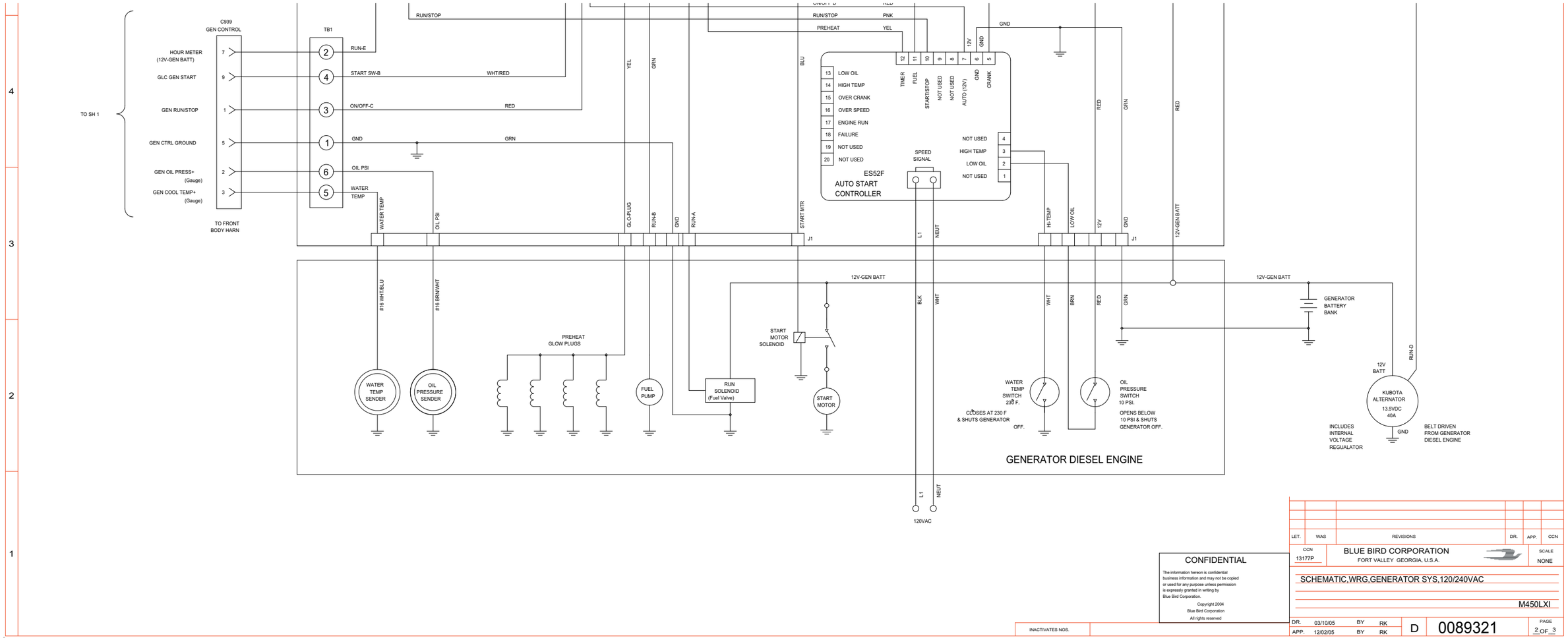

Wiring Schematic 0089321 - Schematic, Wiring, Generator Sys, 120/240Vac - Page 3 of 3

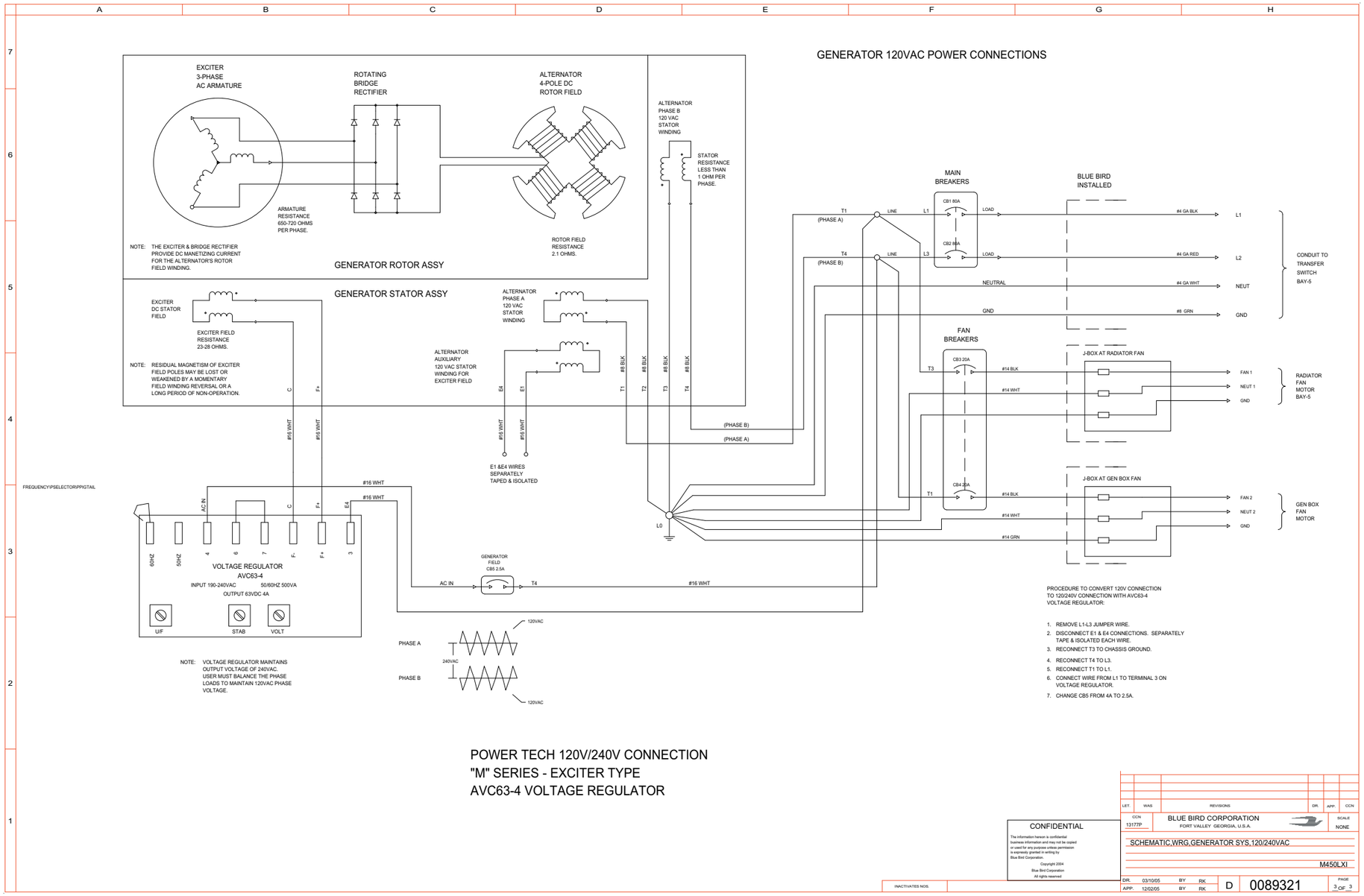

Wiring Schematic 0089321 - Schematic, Wiring, Generator Sys, 120/240Vac - Page 3 of 3 - **Exploded View A**

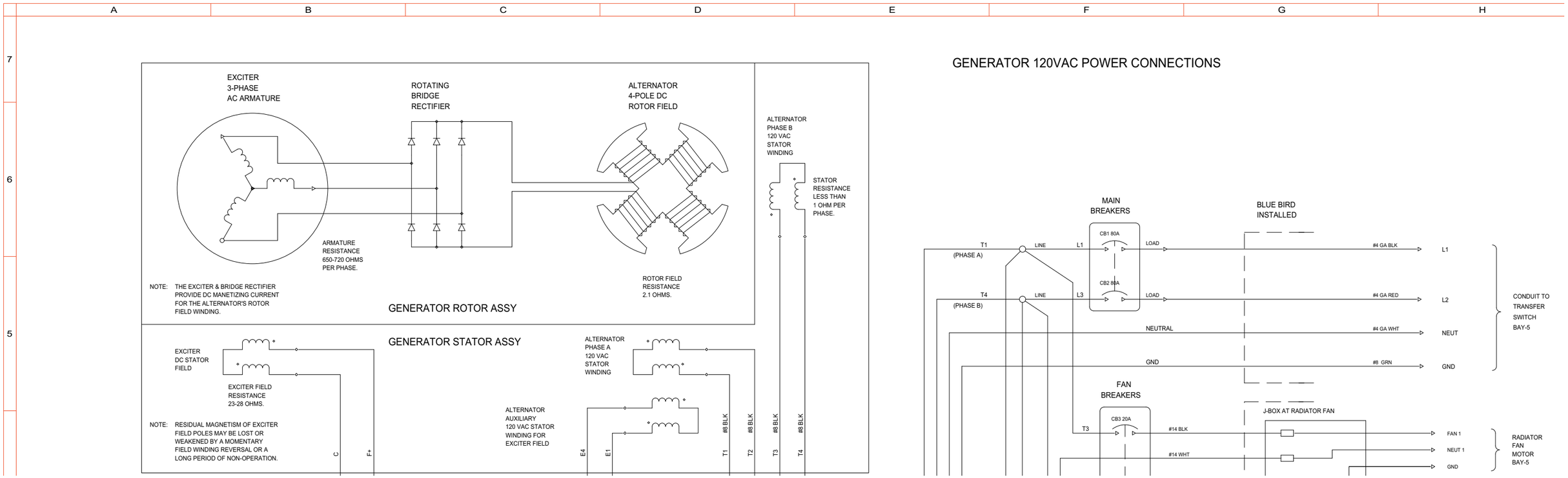

Wiring Schematic 0089321 - Schematic, Wiring, Generator Sys, 120/240Vac - Page 3 of 3 - **Exploded View B**

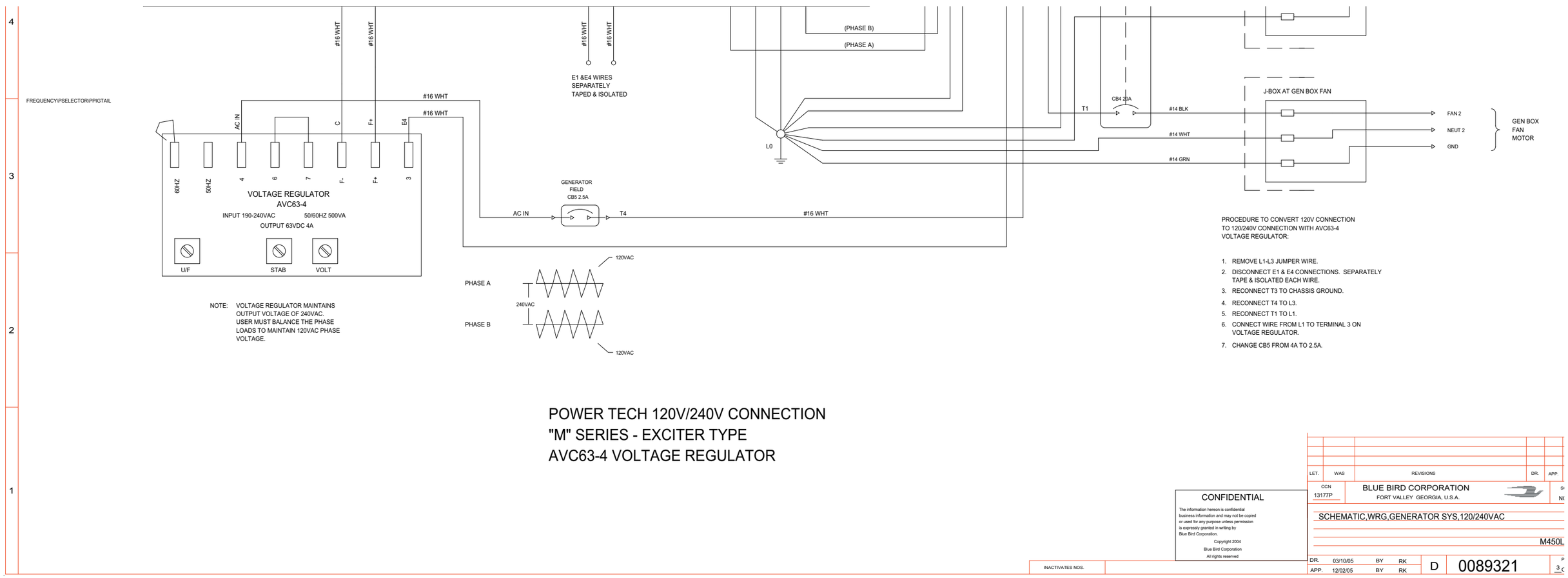

PROCEDURE TO CONVERT 120V CONNECTION TO 120/240V CONNECTION WITH AVC63-4 VOLTAGE REGULATOR:

1. REMOVE L1-L3 JUMPER WIRE.
2. DISCONNECT E1 & E4 CONNECTIONS. SEPARATELY TAPE & ISOLATED EACH WIRE.
3. RECONNECT T3 TO CHASSIS GROUND.
4. RECONNECT T4 TO L3.
5. RECONNECT T1 TO L1.
6. CONNECT WIRE FROM L1 TO TERMINAL 3 ON VOLTAGE REGULATOR.
7. CHANGE CB5 FROM 4A TO 2.5A.

POWER TECH 120V/240V CONNECTION
"M" SERIES - EXCITER TYPE
AVC63-4 VOLTAGE REGULATOR

INACTIVATES NOS.

CONFIDENTIAL

The information hereon is confidential business information and may not be copied or used for any purpose unless permission is expressly granted in writing by Blue Bird Corporation.
Copyright 2004
Blue Bird Corporation
All rights reserved

LET.	WAS	REVISIONS	DR.	APP.

CCN 13177P
BLUE BIRD CORPORATION
FORT VALLEY GEORGIA, U.S.A.

SCHEMATIC,WRG,GENERATOR SYS,120/240VAC

M450L

DR.	03/10/05	BY	RK	D	0089321
APP.	12/02/05	BY	RK		

Wiring Schematic 0089322 - Schematic, Wiring, Eng, Dash, Web, Heating, Sys - Page 1 of 2

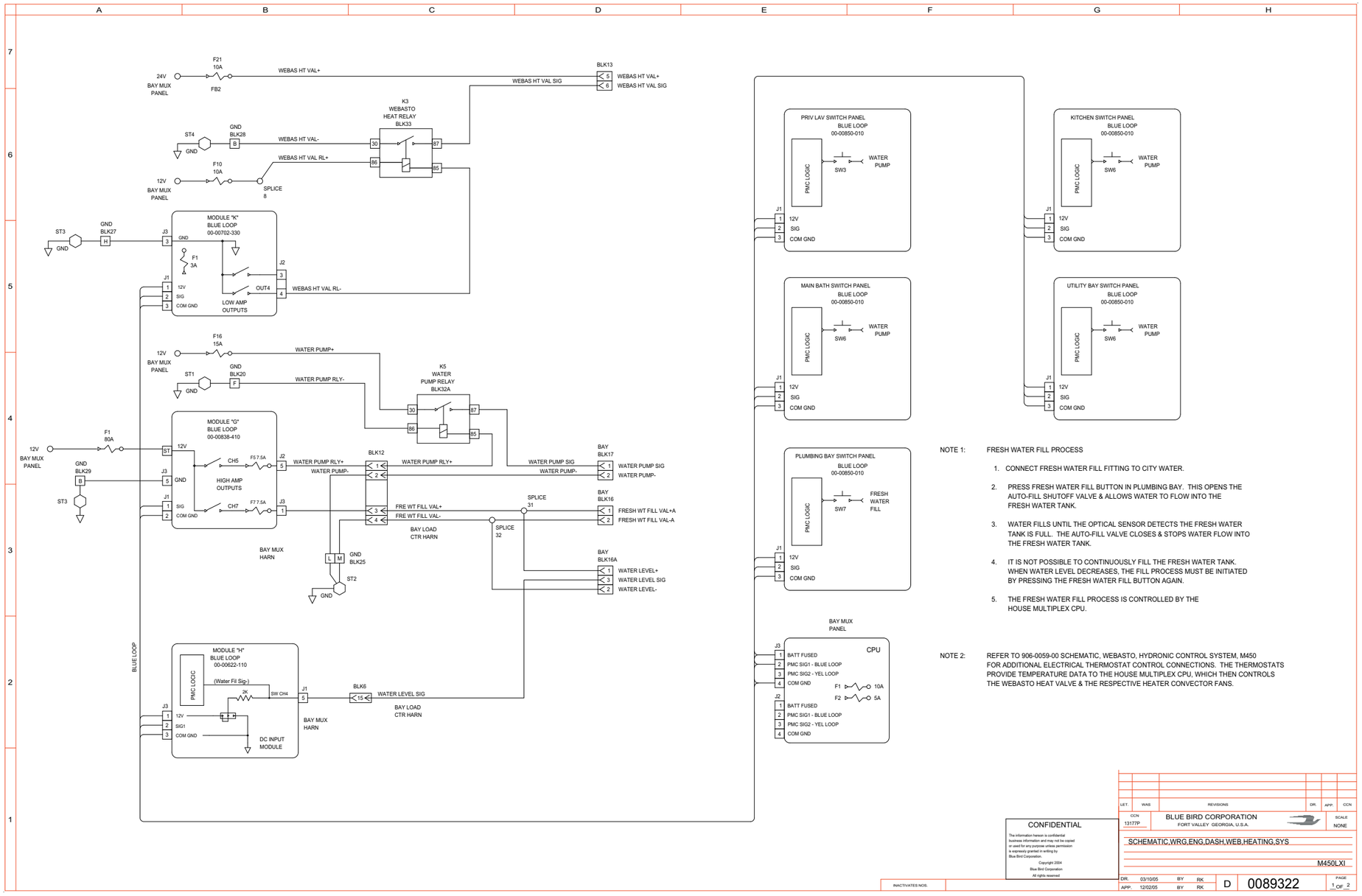

NOTE 1: FRESH WATER FILL PROCESS

1. CONNECT FRESH WATER FILL FITTING TO CITY WATER.
2. PRESS FRESH WATER FILL BUTTON IN PLUMBING BAY. THIS OPENS THE AUTO-FILL SHUTOFF VALVE & ALLOWS WATER TO FLOW INTO THE FRESH WATER TANK.
3. WATER FILLS UNTIL THE OPTICAL SENSOR DETECTS THE FRESH WATER TANK IS FULL. THE AUTO-FILL VALVE CLOSES & STOPS WATER FLOW INTO THE FRESH WATER TANK.
4. IT IS NOT POSSIBLE TO CONTINUOUSLY FILL THE FRESH WATER TANK. WHEN WATER LEVEL DECREASES, THE FILL PROCESS MUST BE INITIATED BY PRESSING THE FRESH WATER FILL BUTTON AGAIN.
5. THE FRESH WATER FILL PROCESS IS CONTROLLED BY THE HOUSE MULTIPLEX CPU.

NOTE 2: REFER TO 906-0059-00 SCHEMATIC, WEBASTO, HYDRONIC CONTROL SYSTEM, M450 FOR ADDITIONAL ELECTRICAL THERMOSTAT CONTROL CONNECTIONS. THE THERMOSTATS PROVIDE TEMPERATURE DATA TO THE HOUSE MULTIPLEX CPU, WHICH THEN CONTROLS THE WEBASTO HEAT VALVE & THE RESPECTIVE HEATER CONVECTOR FANS.

CONFIDENTIAL
The information hereon is confidential business information and may not be copied or used for any purpose unless permission is expressly granted in writing by Blue Bird Corporation.
Copyright 2004 Blue Bird Corporation All rights reserved

LET. | WAS | REVISIONS | DR. | APP. | CCN

CCN 13177P — BLUE BIRD CORPORATION, FORT VALLEY GEORGIA, U.S.A. — SCALE NONE

SCHEMATIC,WRG,ENG,DASH,WEB,HEATING,SYS

M450LXI

DR. 03/10/05 BY RK
APP. 12/02/05 BY RK

D 0089322 PAGE 1 OF 2

INACTIVATES NOS.

Wiring Schematic 0089322 - Schematic, Wiring, Eng, Dash, Web, Heating, Sys - Page 2 of 2

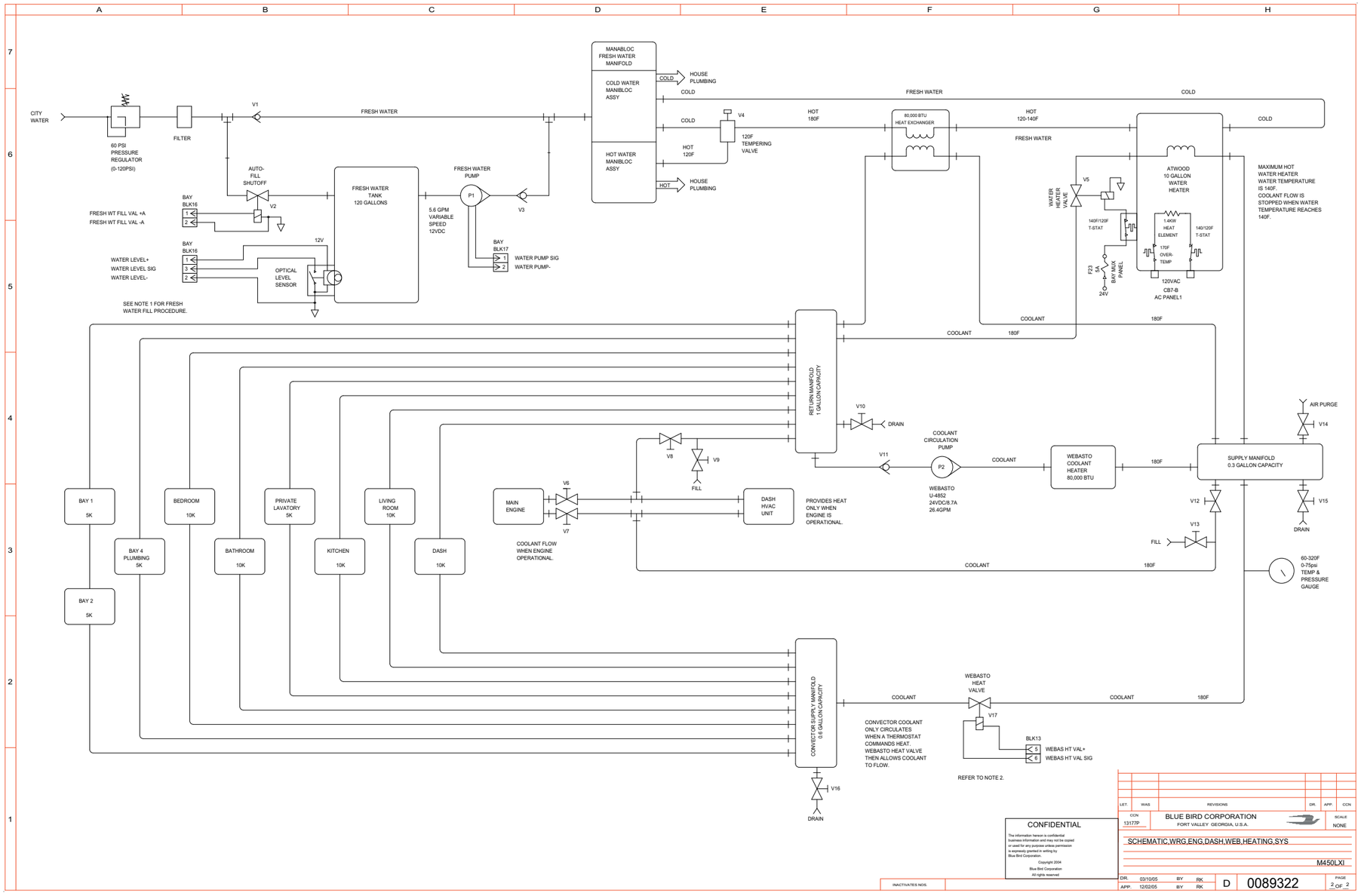

Wiring Schematic 0089536 - Schematic, Wiring, Dual Motors Synchronizer

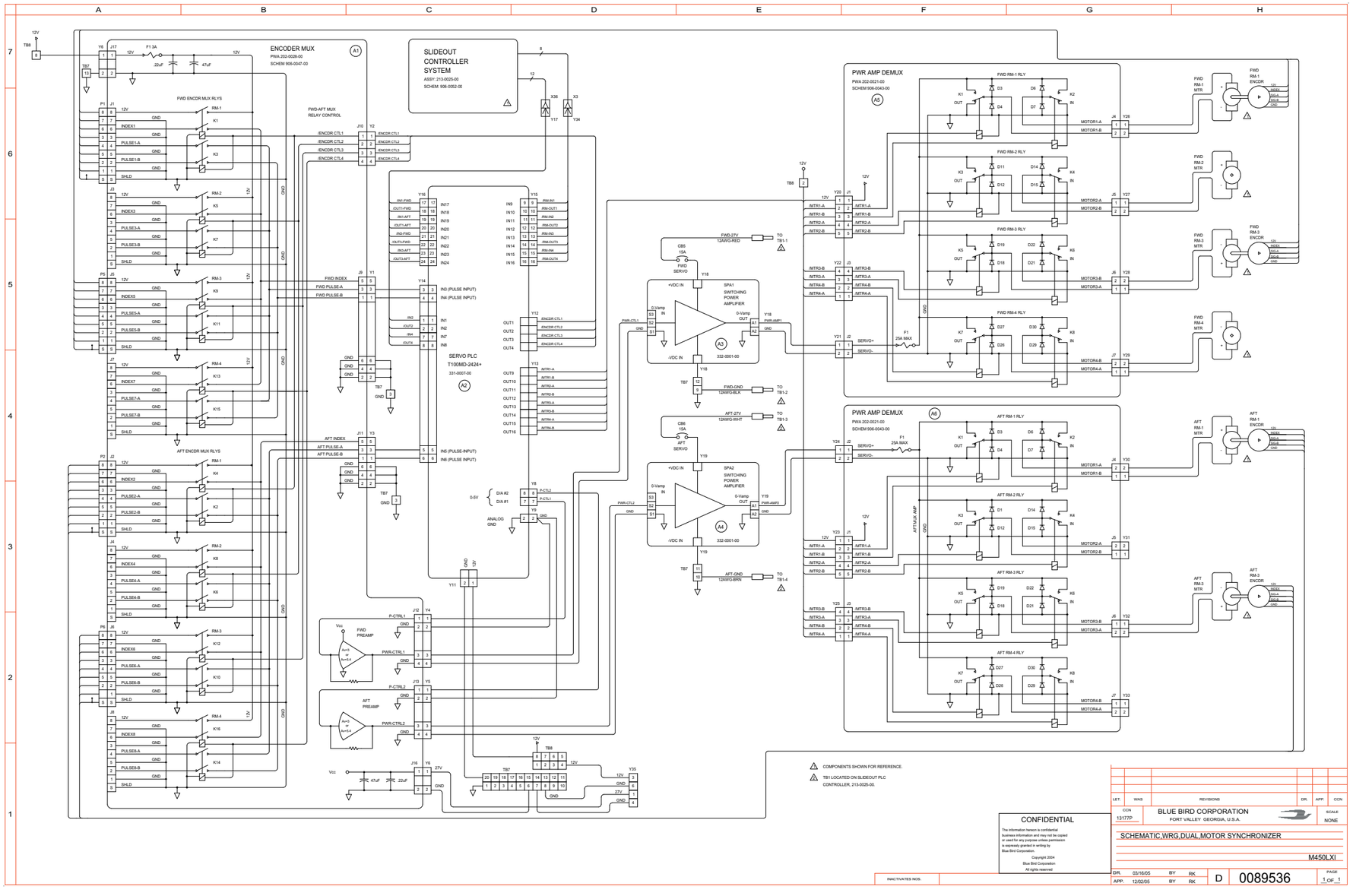

Wiring Schematic 0089536 - Schematic, Wiring, Dual Motors Synchronizer - **Exploded View A**

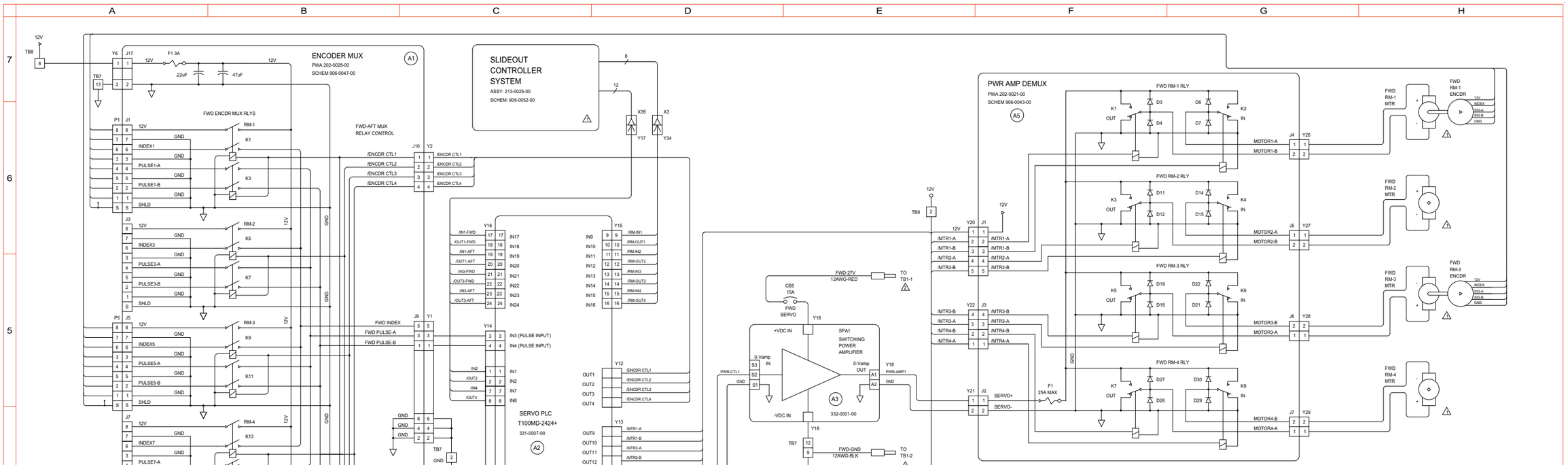

Wiring Schematic 0089536 - Schematic, Wiring, Dual Motors Synchronizer - **Exploded View B**

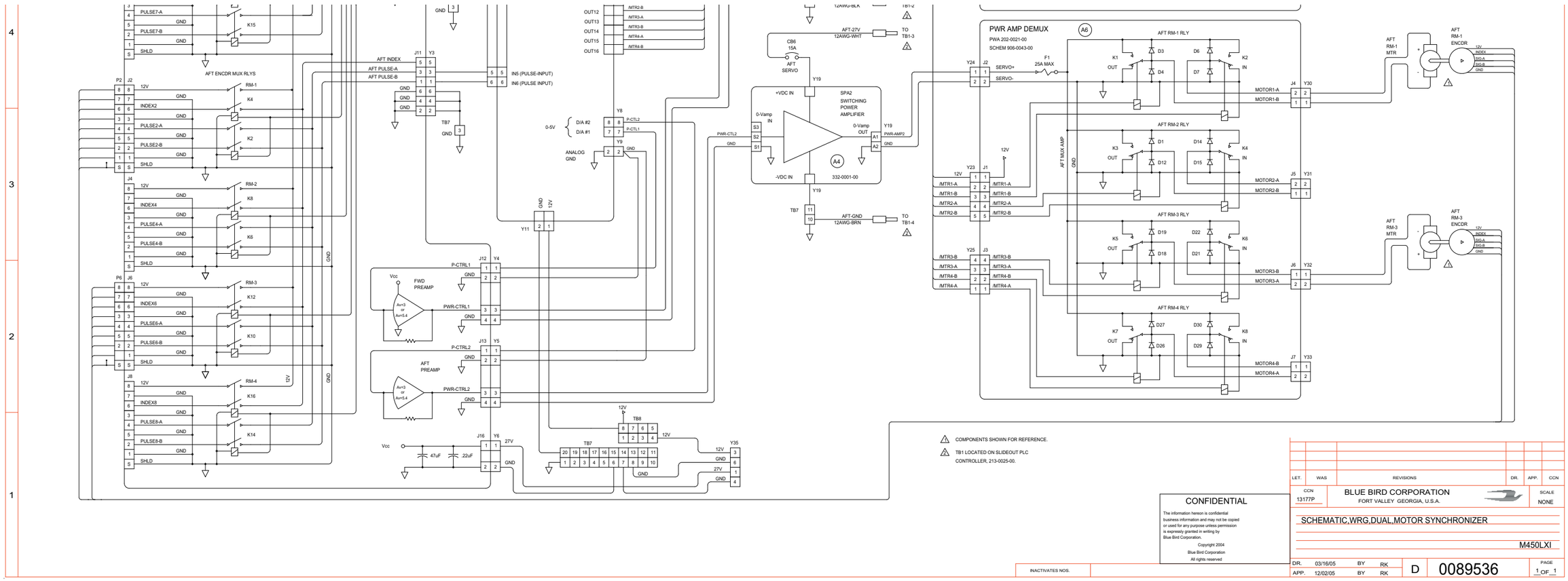

Wiring Schematic 0089537 - Schematic, Wiring, Slideout, PLC Controller, 4-Room - Page 1 of 5

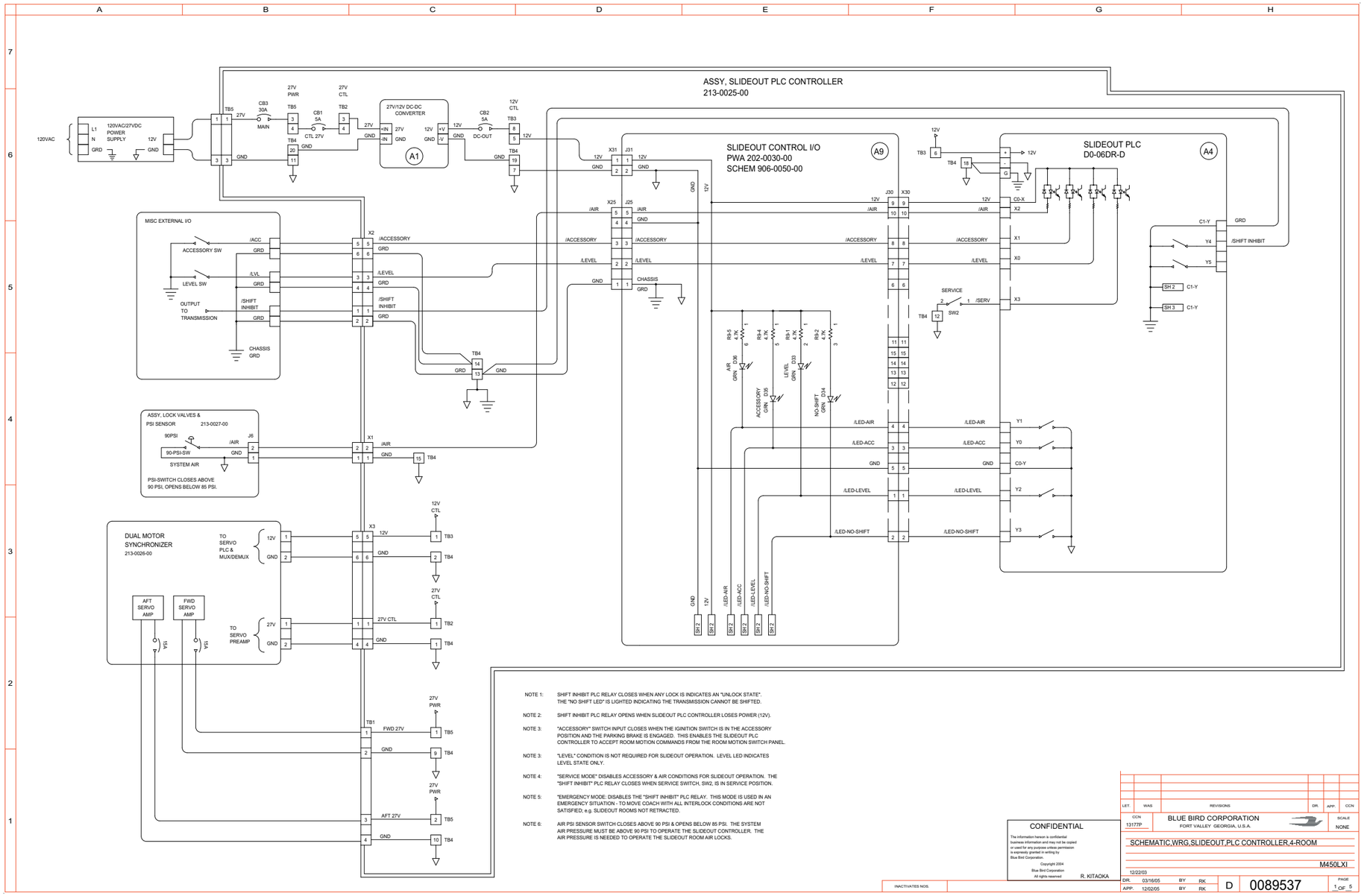

NOTE 1: SHIFT INHIBIT PLC RELAY CLOSES WHEN ANY LOCK IS INDICATES AN "UNLOCK STATE". THE "NO SHIFT LED" IS LIGHTED INDICATING THE TRANSMISSION CANNOT BE SHIFTED.

NOTE 2: SHIFT INHIBIT PLC RELAY OPENS WHEN SLIDEOUT PLC CONTROLLER LOSES POWER (12V).

NOTE 3: "ACCESSORY" SWITCH INPUT CLOSES WHEN THE IGNITION SWITCH IS IN THE ACCESSORY POSITION AND THE PARKING BRAKE IS ENGAGED. THIS ENABLES THE SLIDEOUT PLC CONTROLLER TO ACCEPT ROOM MOTION COMMANDS FROM THE ROOM MOTION SWITCH PANEL.

NOTE 3: "LEVEL" CONDITION IS NOT REQUIRED FOR SLIDEOUT OPERATION. LEVEL LED INDICATES LEVEL STATE ONLY.

NOTE 4: "SERVICE MODE" DISABLES ACCESSORY & AIR CONDITIONS FOR SLIDEOUT OPERATION. THE "SHIFT INHIBIT" PLC RELAY CLOSES WHEN SERVICE SWITCH, SW2, IS IN SERVICE POSITION.

NOTE 5: "EMERGENCY MODE: DISABLES THE "SHIFT INHIBIT" PLC RELAY. THIS MODE IS USED IN AN EMERGENCY SITUATION - TO MOVE COACH WITH ALL INTERLOCK CONDITIONS ARE NOT SATISFIED; e.g. SLIDEOUT ROOMS NOT RETRACTED.

NOTE 6: AIR PSI SENSOR SWITCH CLOSES ABOVE 90 PSI & OPENS BELOW 85 PSI. THE SYSTEM AIR PRESSURE MUST BE ABOVE 90 PSI TO OPERATE THE SLIDEOUT CONTROLLER. THE AIR PRESSURE IS NEEDED TO OPERATE THE SLIDEOUT ROOM AIR LOCKS.

CONFIDENTIAL
The information herein is confidential business information and may not be copied or used for any purpose unless permission is expressly granted in writing by: Blue Bird Corporation.
Copyright 2004
Blue Bird Corporation
All rights reserved
R. KITAOKA

BLUE BIRD CORPORATION
FORT VALLEY GEORGIA, U.S.A.
SCHEMATIC,WRG,SLIDEOUT,PLC CONTROLLER,4-ROOM
M450LXI
12/22/03
DR. 03/16/05 BY RK
APP. 12/02/05 BY RK
D 0089537
PAGE 1 OF 5

Wiring Schematic 0089537 - Schematic, Wiring, Slideout, PLC Controller, 4-Room - Page 2 of 5

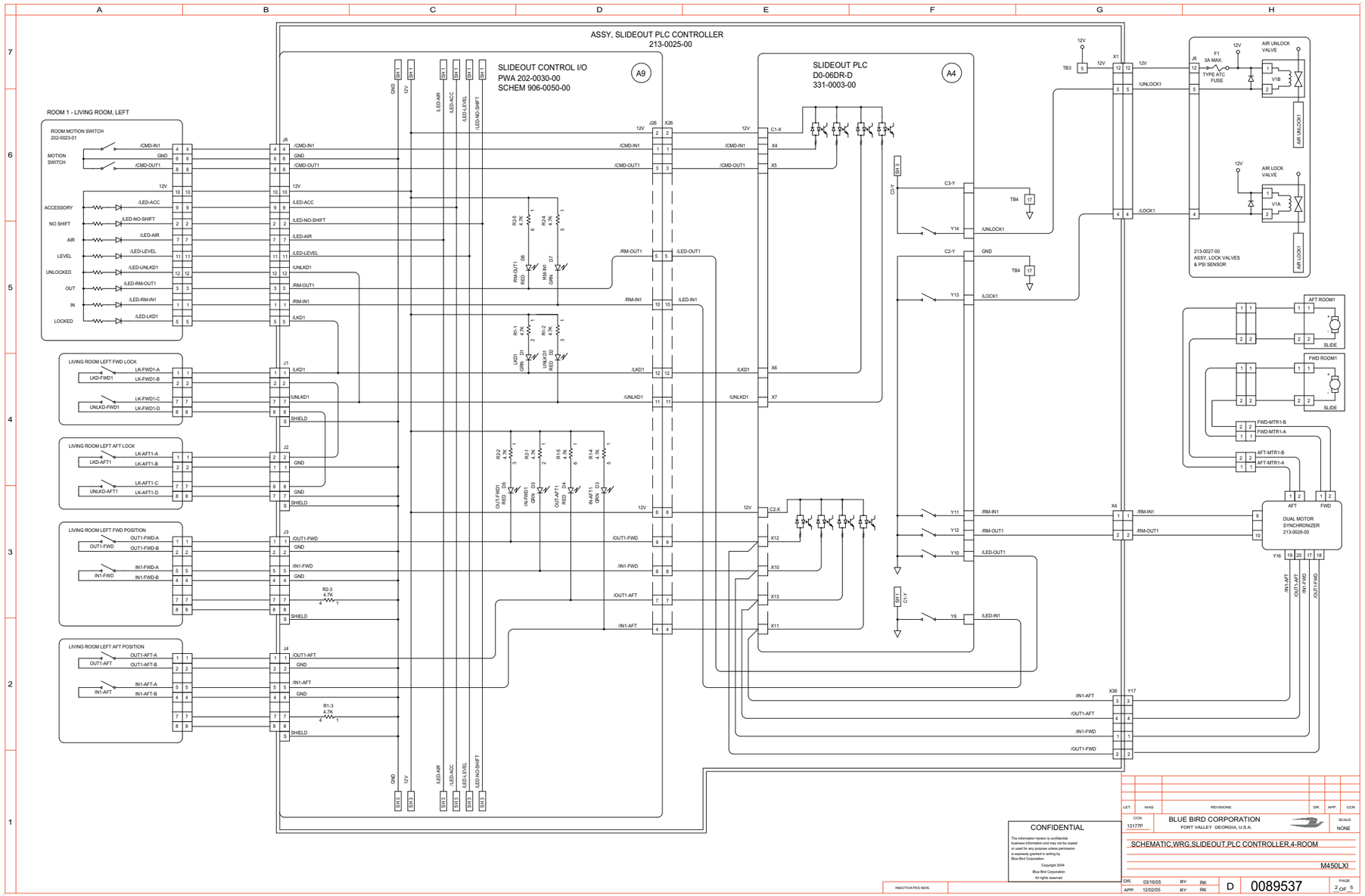

Wiring Schematic 0089537 - Schematic, Wiring, Slideout, PLC Controller, 4-Room - Page 2 of 5 - **Exploded View A**

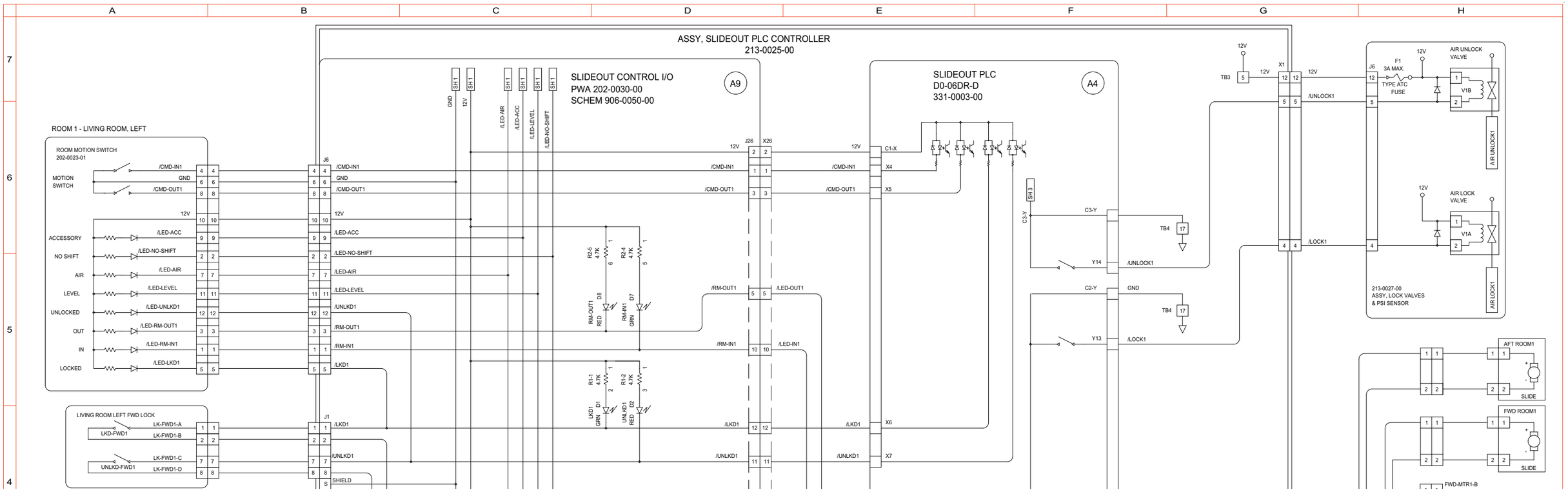

Wiring Schematic 0089537 - Schematic, Wiring, Slideout, PLC Controller, 4-Room - Page 2 of 5 - **Exploded View B**

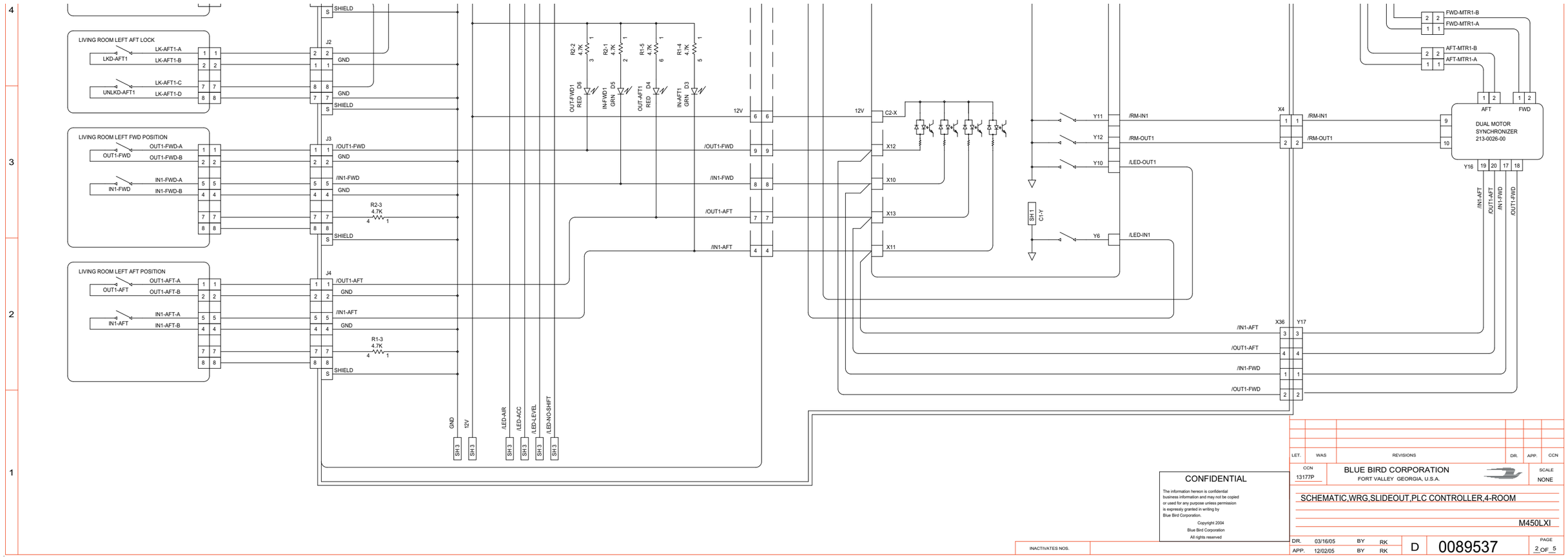

CONFIDENTIAL

The information hereon is confidential business information and may not be copied or used for any purpose unless permission is expressly granted in writing by Blue Bird Corporation.

Copyright 2004
Blue Bird Corporation
All rights reserved

INACTIVATES NOS.

LET.	WAS	REVISIONS	DR.	APP.	CCN

CCN 13177P — BLUE BIRD CORPORATION, FORT VALLEY GEORGIA, U.S.A. — SCALE NONE

SCHEMATIC,WRG,SLIDEOUT,PLC CONTROLLER,4-ROOM

M450LXI

DR.	03/16/05	BY	RK	D	0089537
APP.	12/02/05	BY	RK		PAGE 2 OF 5

Wiring Schematic 0089537 - Schematic, Wiring, Slideout, PLC Controller, 4-Room - Page 3 of 5

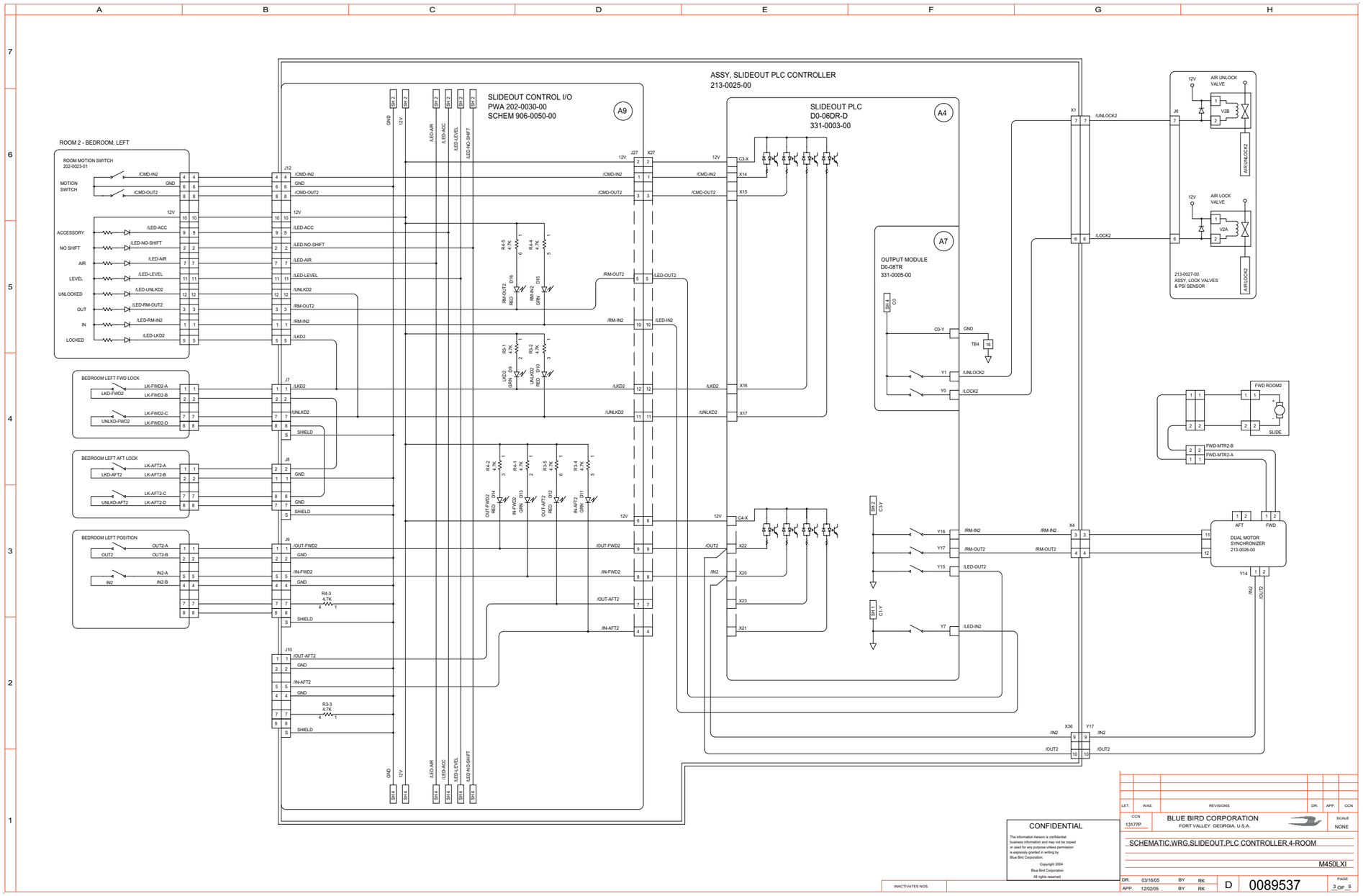

Wiring Schematic 0089537 - Schematic, Wiring, Slideout, PLC Controller, 4-Room - Page 4 of 5

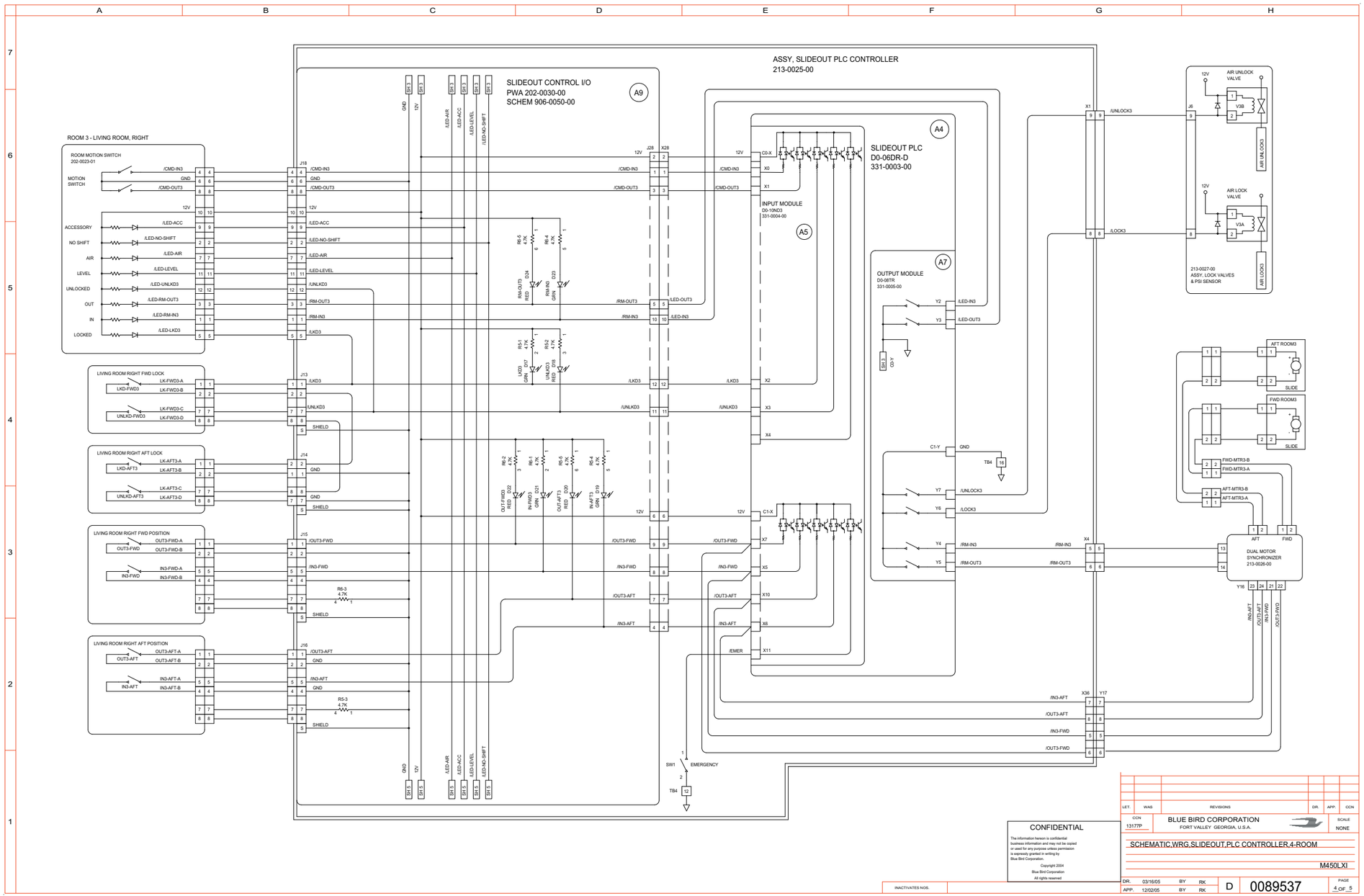

Wiring Schematic 0089537 - Schematic, Wiring, Slideout, PLC Controller, 4-Room - Page 5 of 5

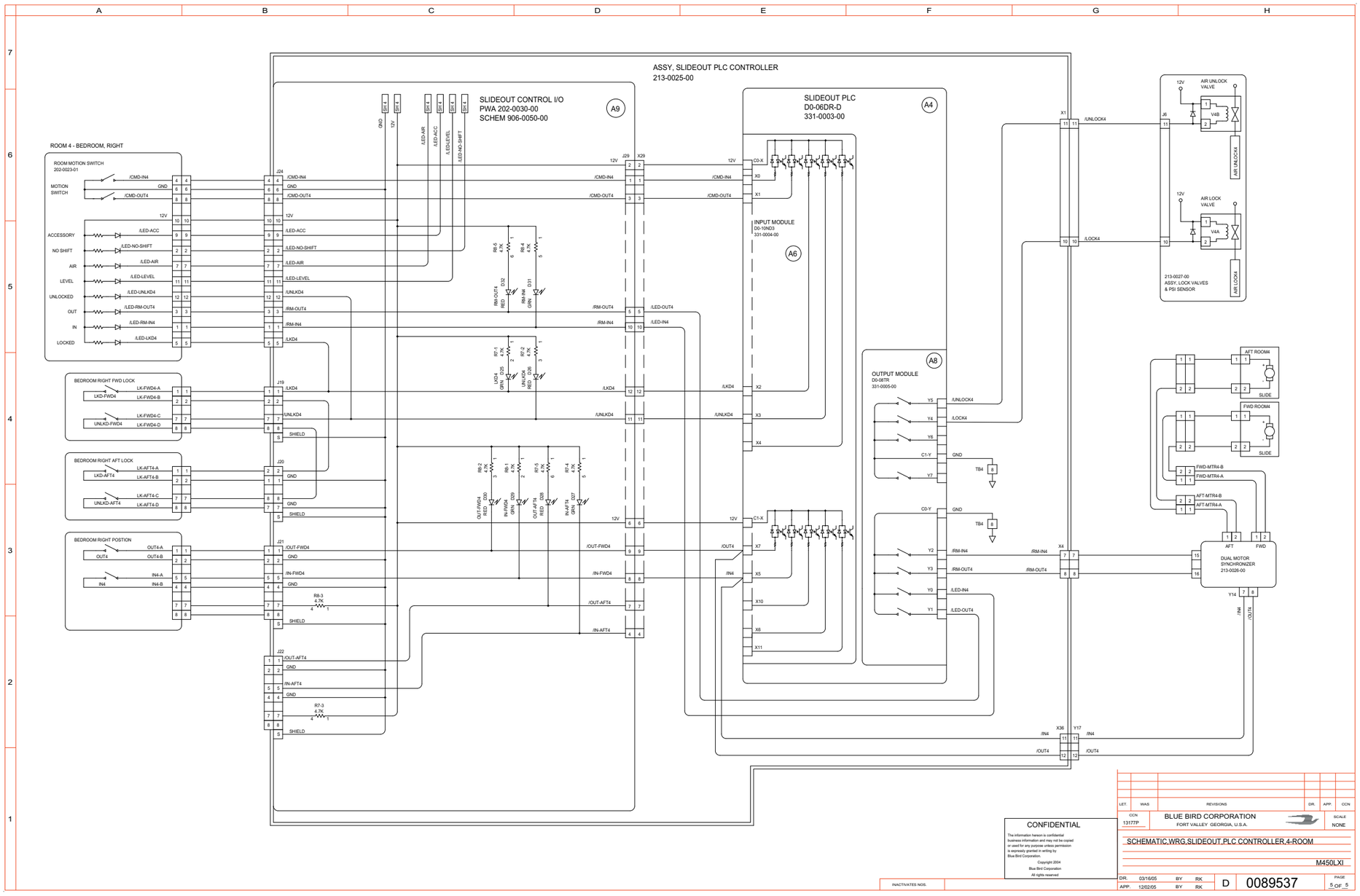

Wiring Schematic 0098616 - Schematic, Wiring, Dash, Switch Panels - Page 1 of 7

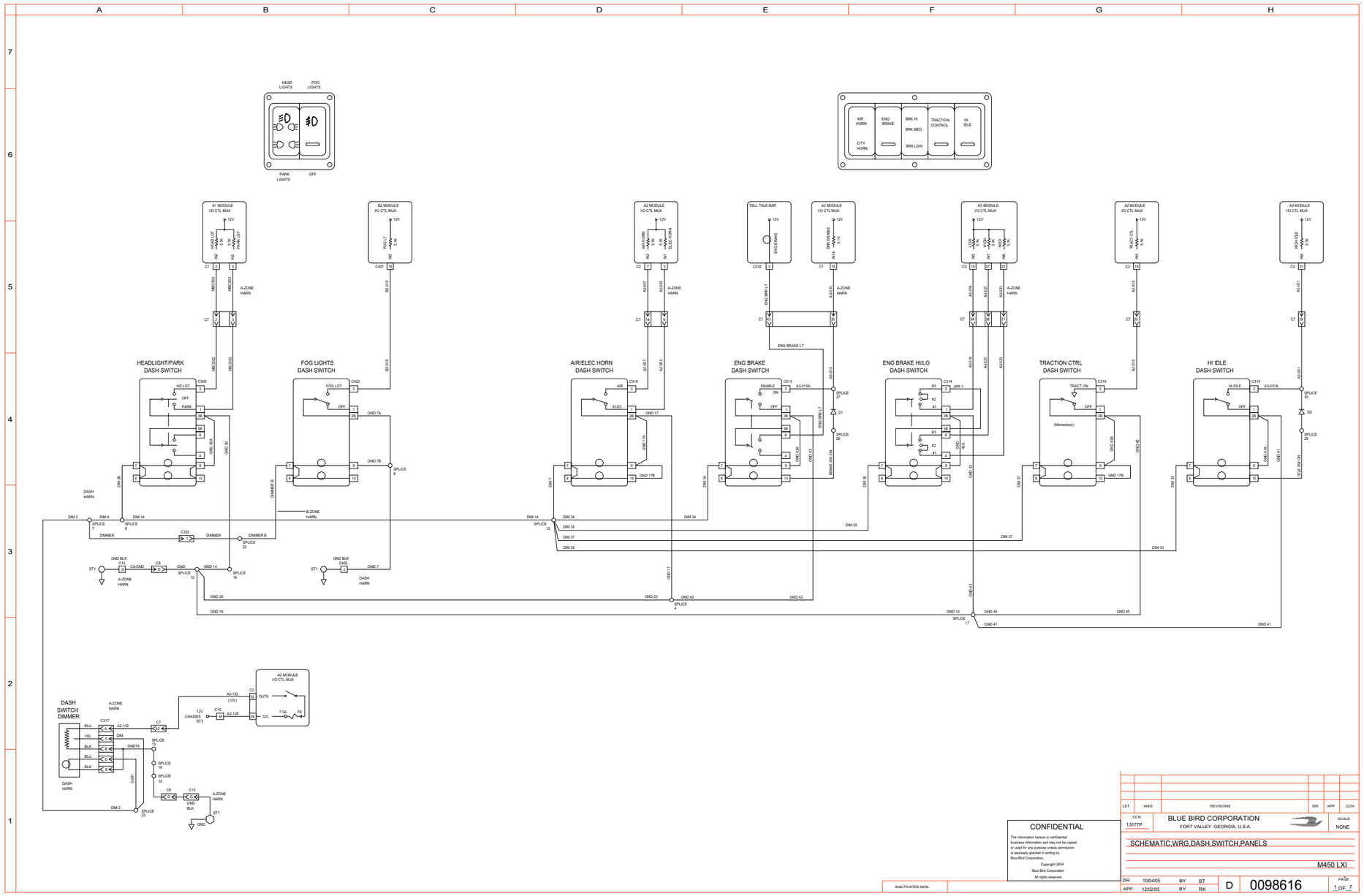

Wiring Schematic 0098616 - Schematic, Wiring, Dash, Switch Panels - Page 2 of 7

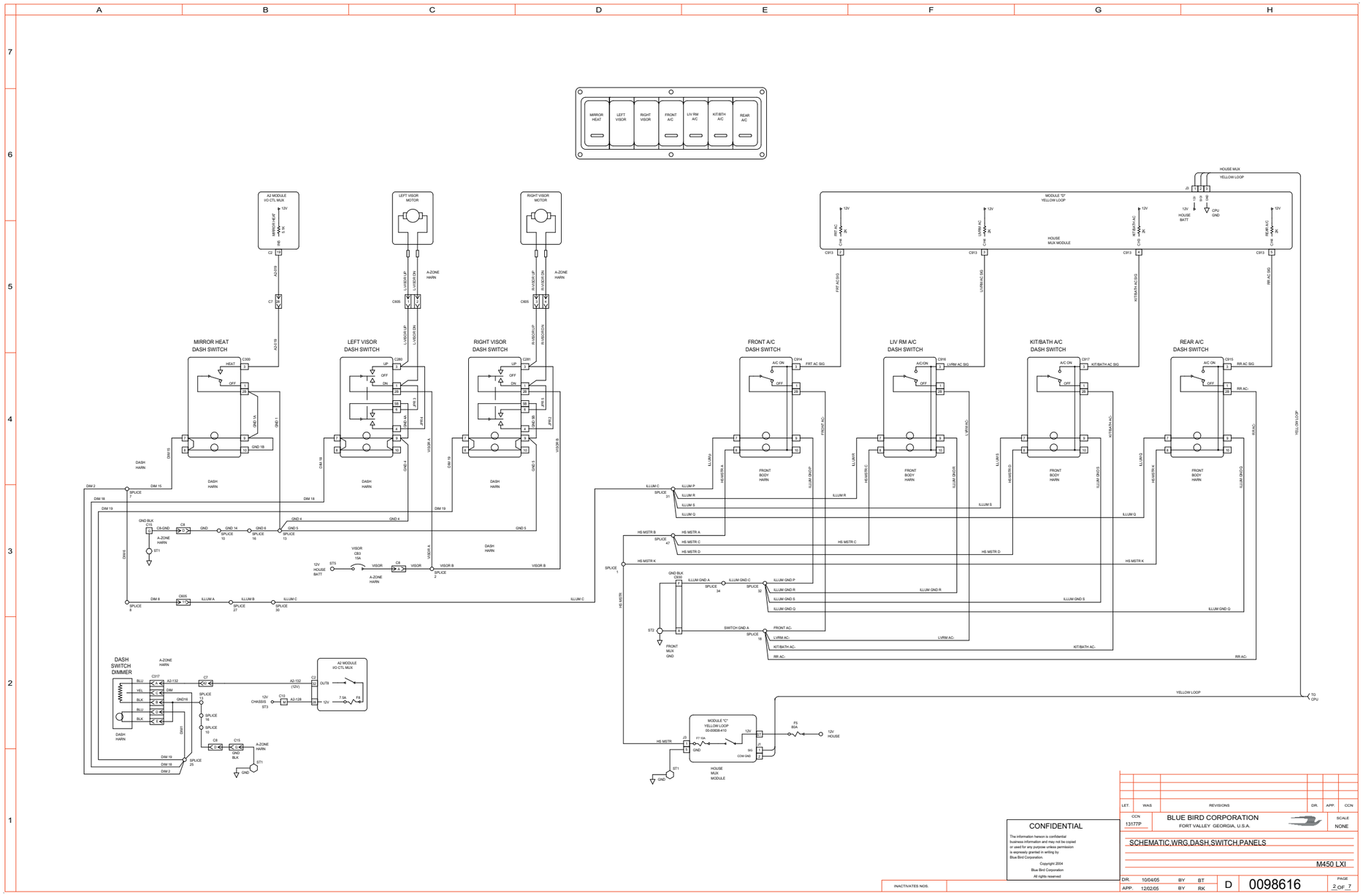

Wiring Schematic 0098616 - Schematic, Wiring, Dash, Switch Panels - Page 3 of 7

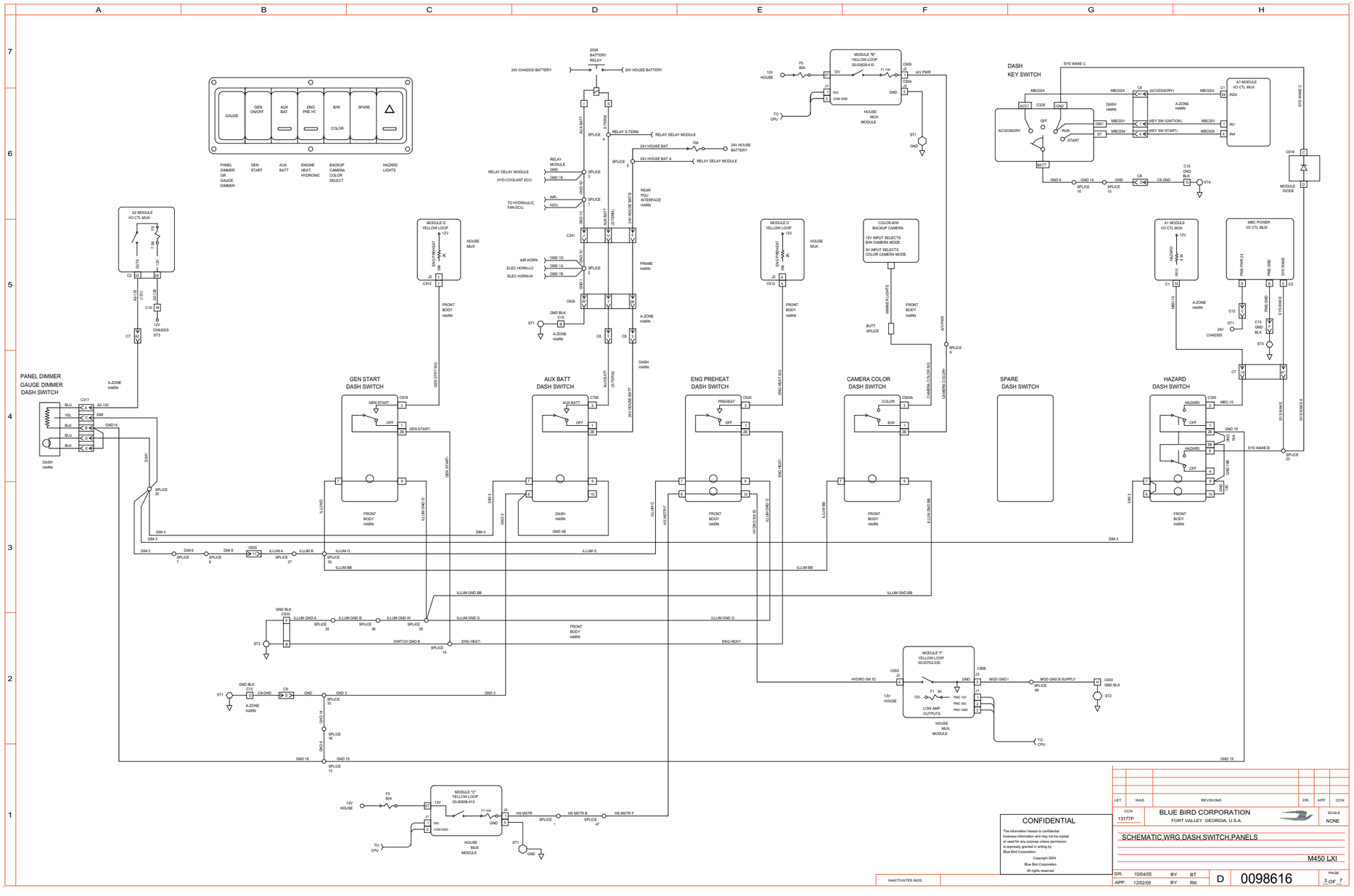

Wiring Schematic 0098616 - Schematic, Wiring, Dash, Switch Panels - Page 4 of 7

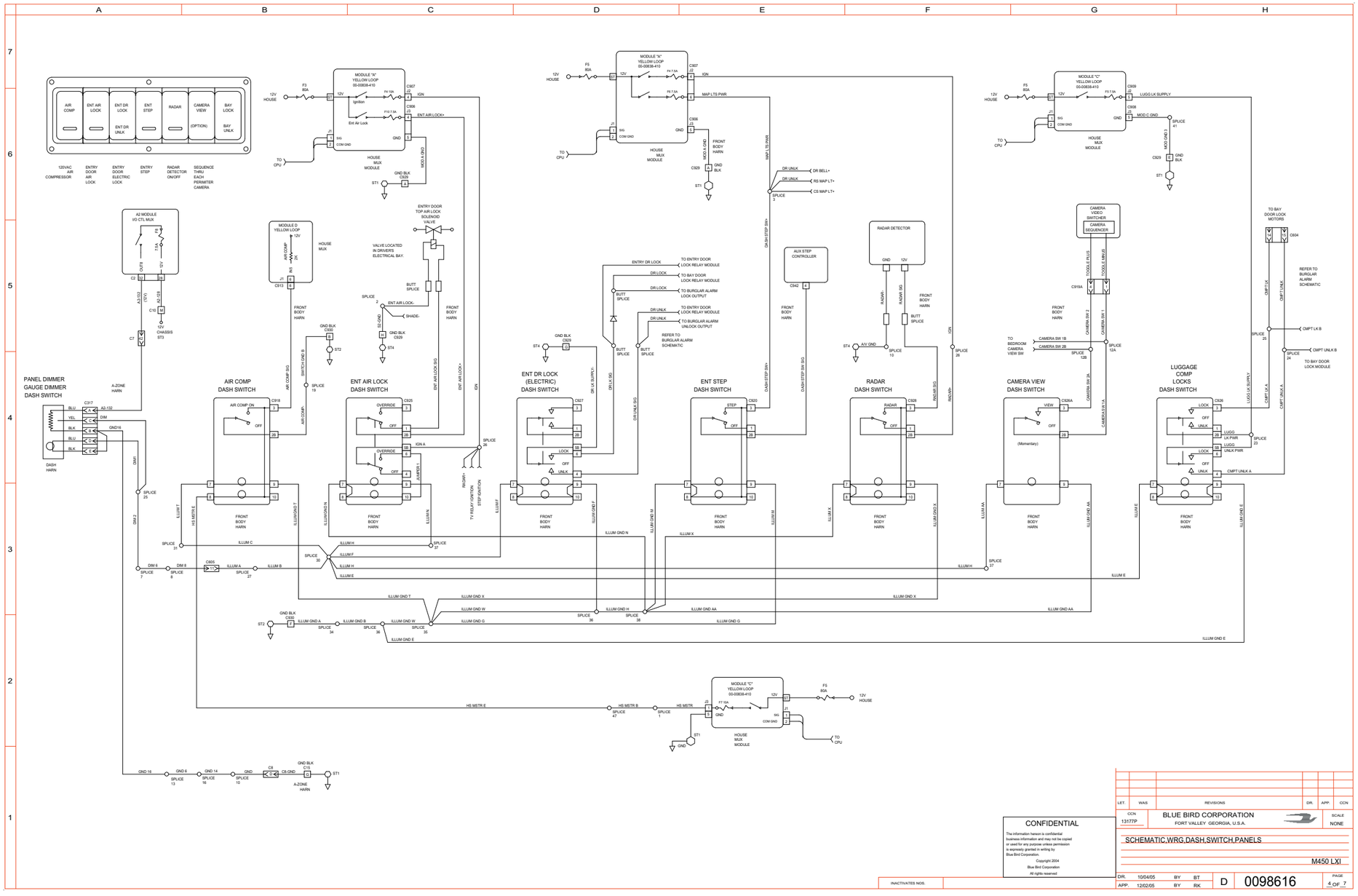

Wiring Schematic 0098616 - Schematic, Wiring, Dash, Switch Panels - Page 5 of 7

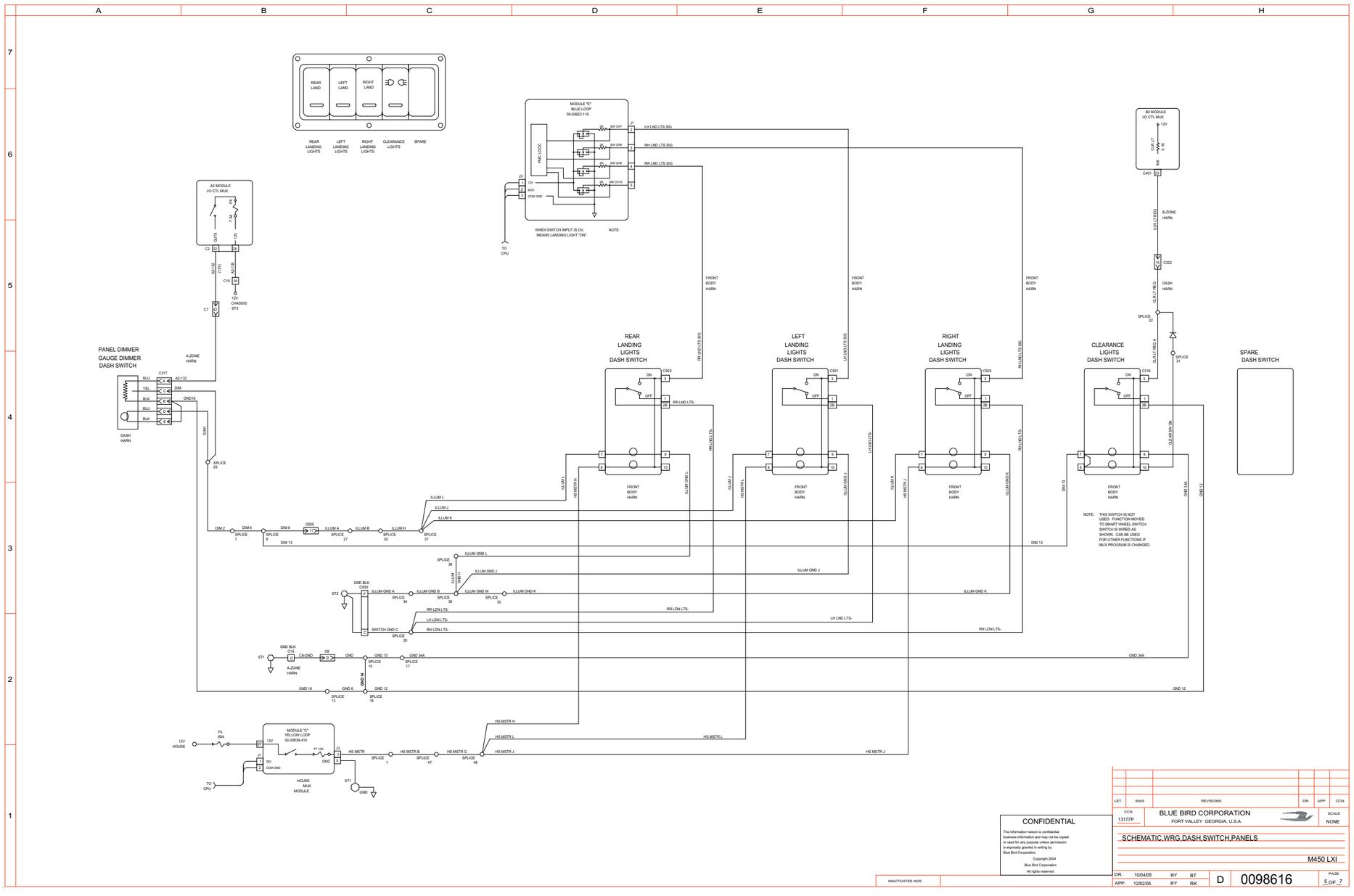

Wiring Schematic 0098616 - Schematic, Wiring, Dash, Switch Panels - Page 6 of 7

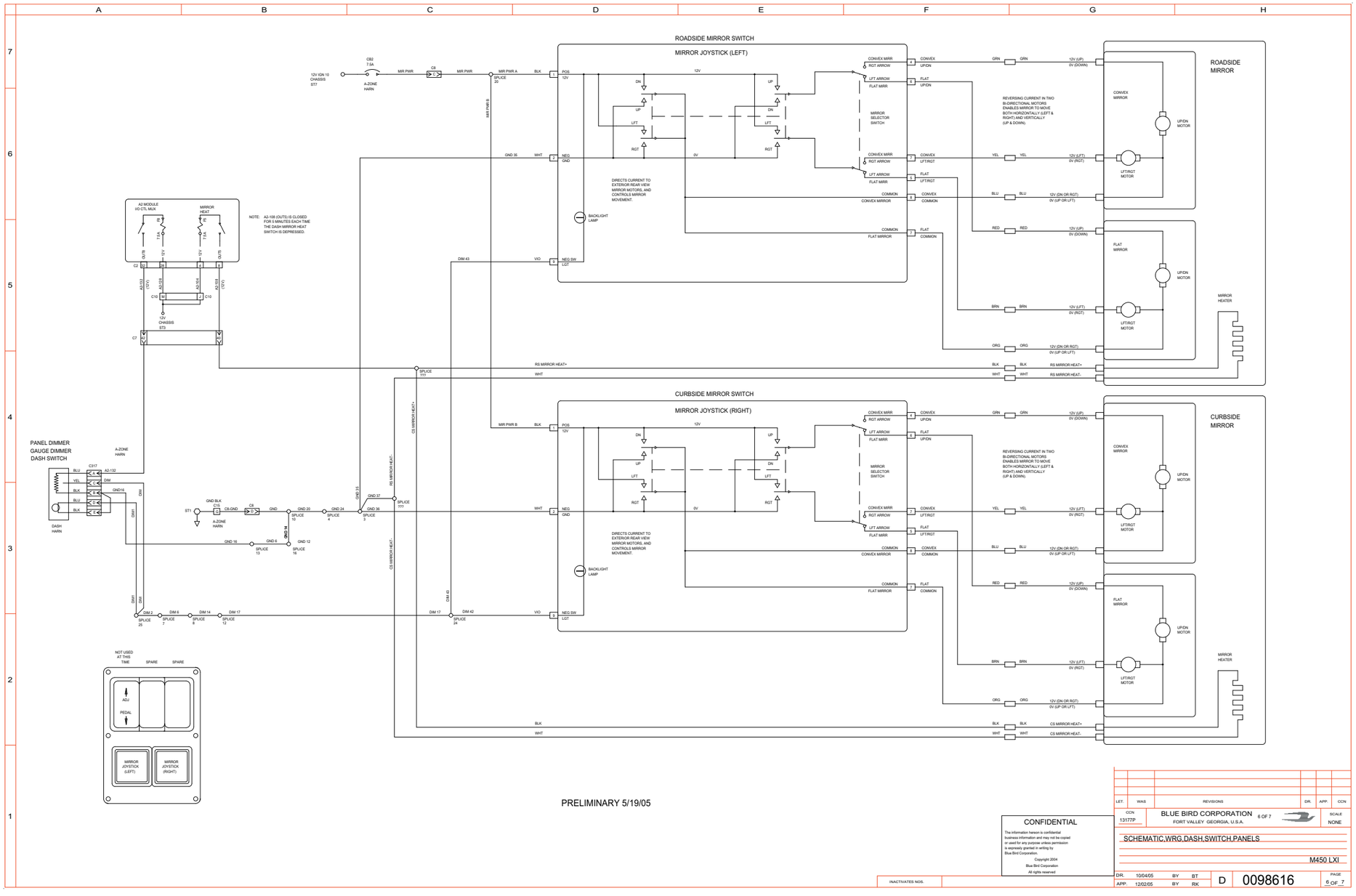

Wiring Schematic 0098616 - Schematic, Wiring, Dash, Switch Panels - Page 7 of 7

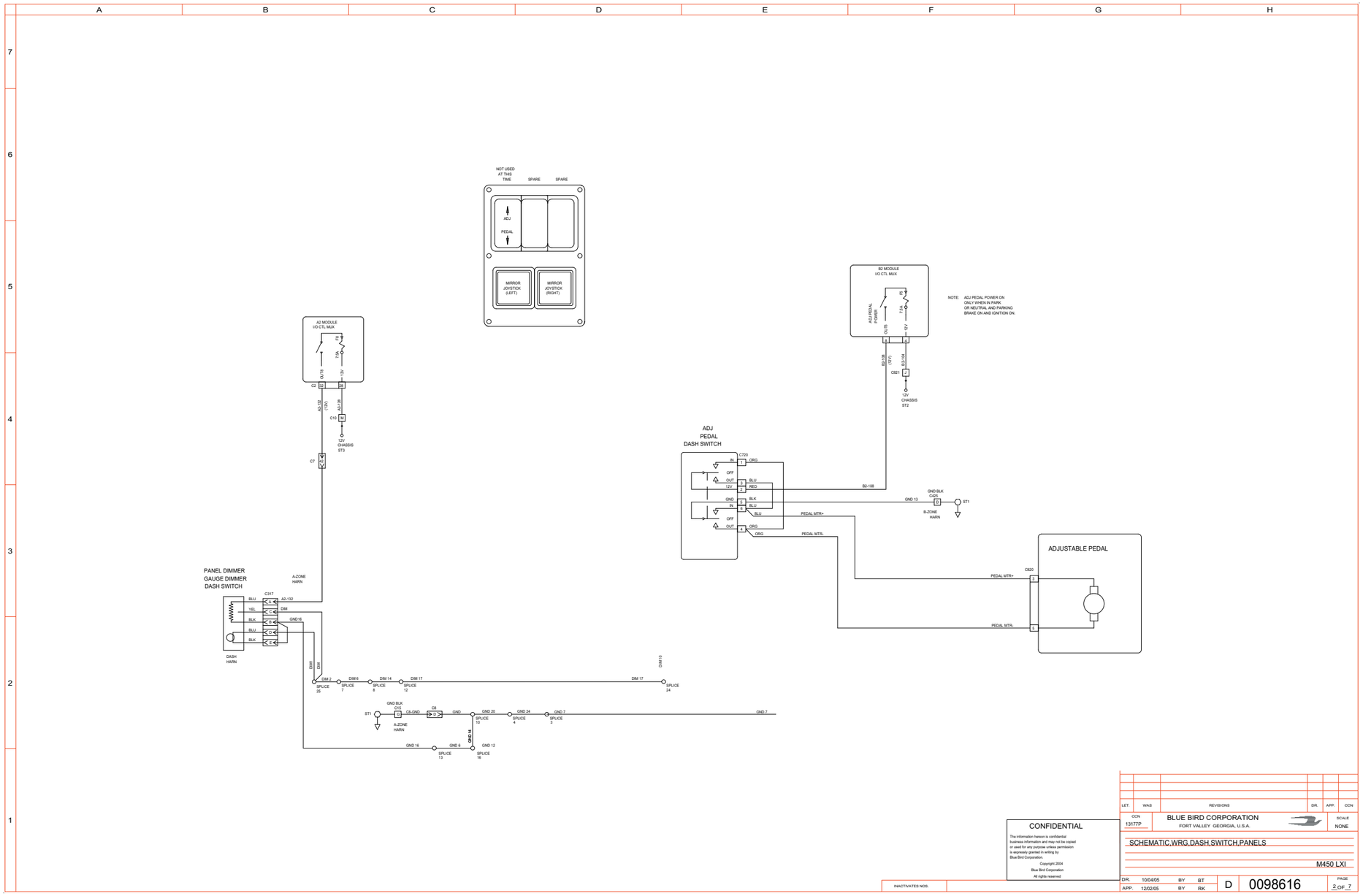

Wiring Schematic 0099998 - Schematic, Pneumatic, Air Lock Valves, PSI Sensor

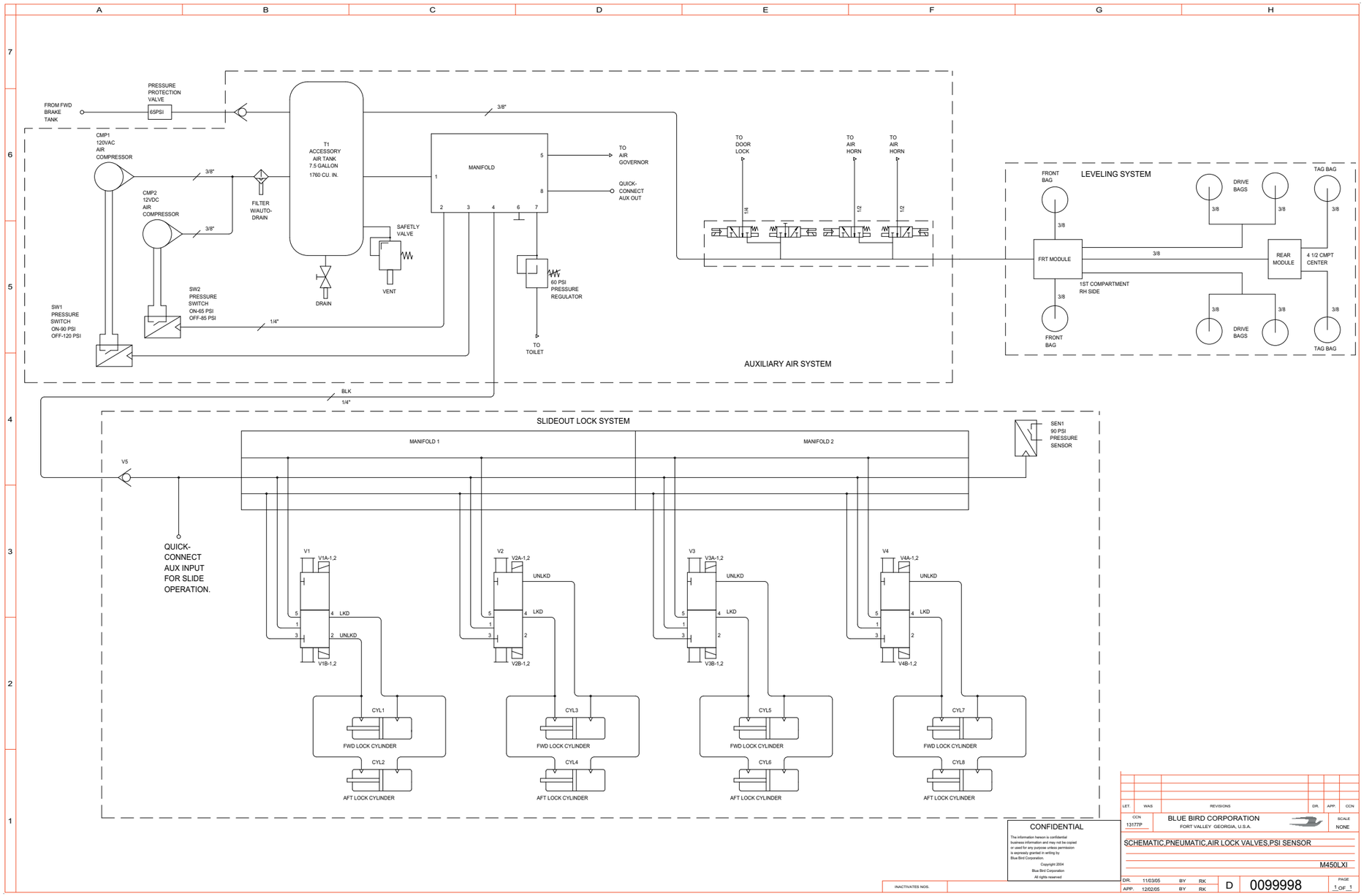

Wiring Schematic 0089289 - Schematic, Wiring, Hyd, Rftop A/C, Elec. Ht, Ctl. - Page 1 of 5

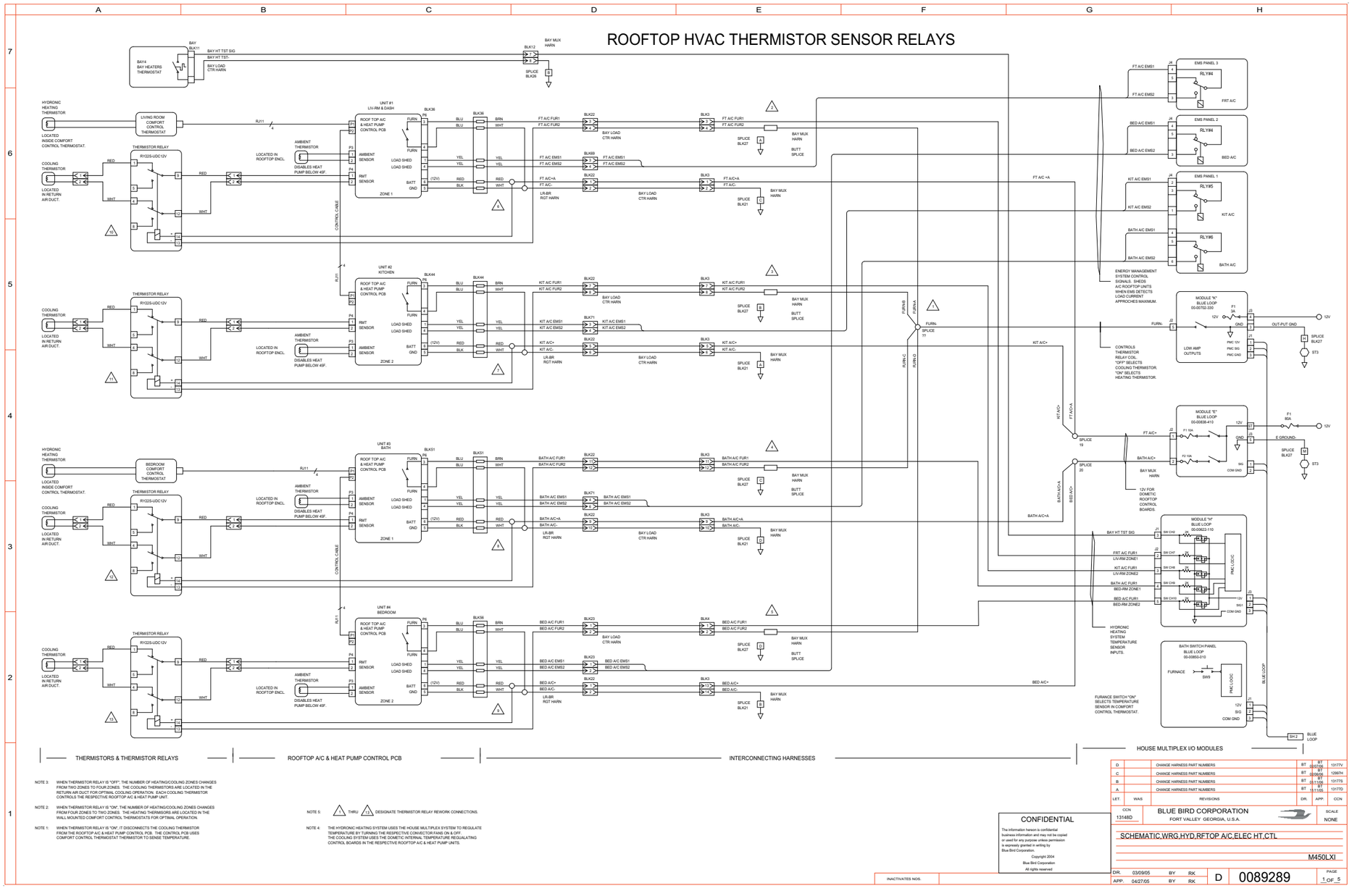

Wiring Schematic 0089289 - Schematic, Wiring, Hyd, Rftop A/C, Elec. Ht, Ctl. - Page 2 of 5

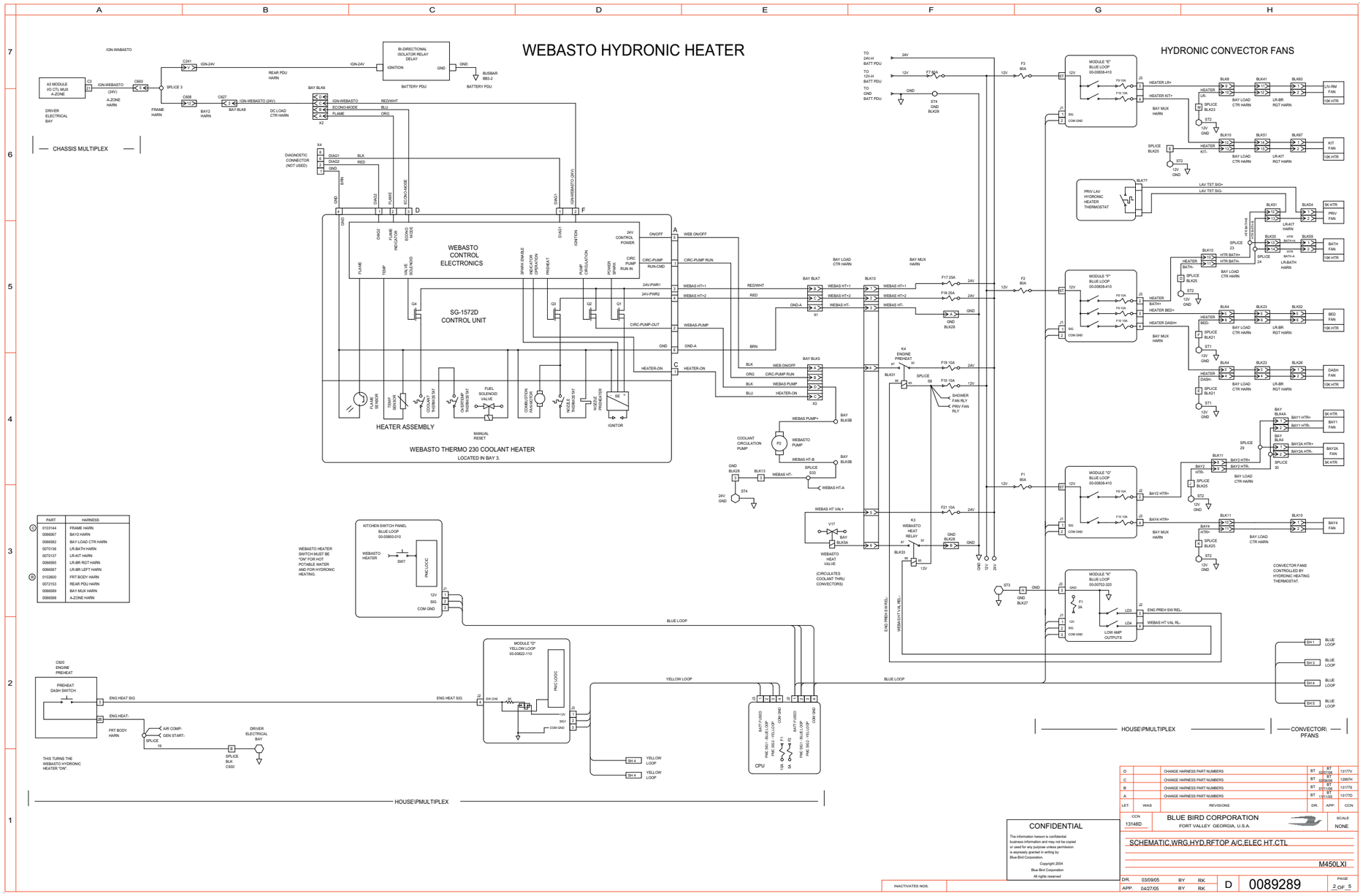

Wiring Schematic 0089289 - Schematic, Wiring, Hyd, Rftop A/C, Elec. Ht, Ctl. - Page 2 of 5 - **Exploded View A**

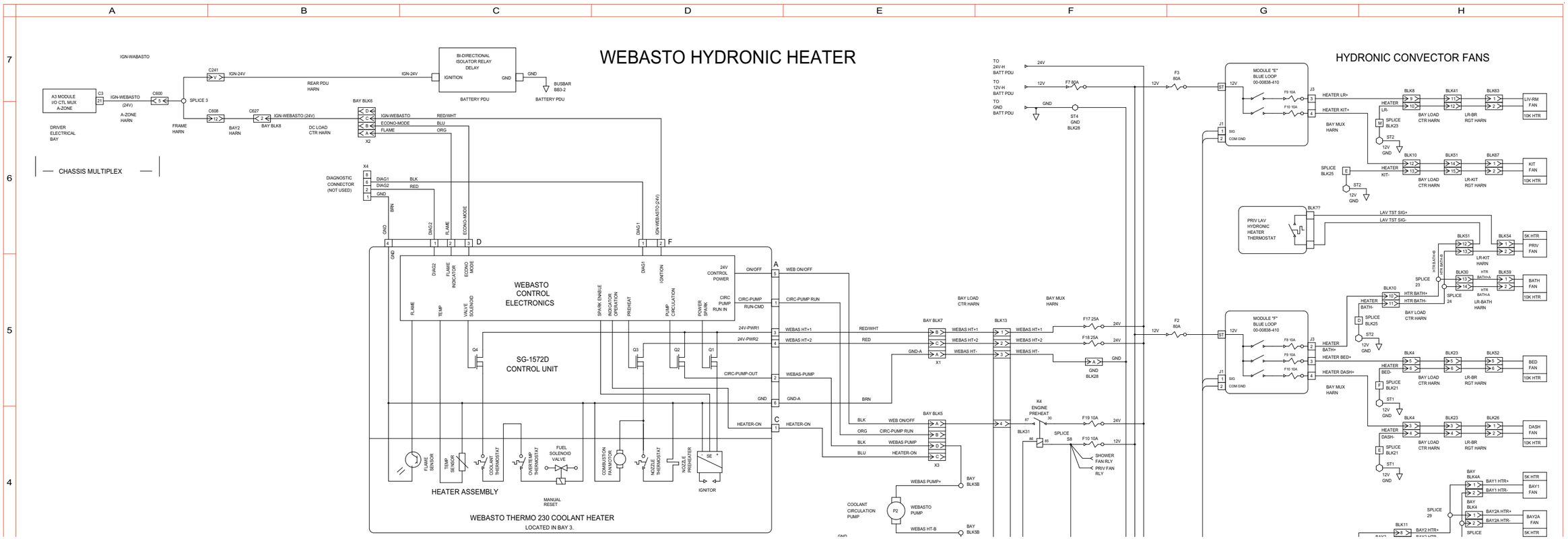

Wiring Schematic 0089289 - Schematic, Wiring, Hyd, Rftop A/C, Elec. Ht, Ctl. - Page 2 of 5 - **Exploded View B**

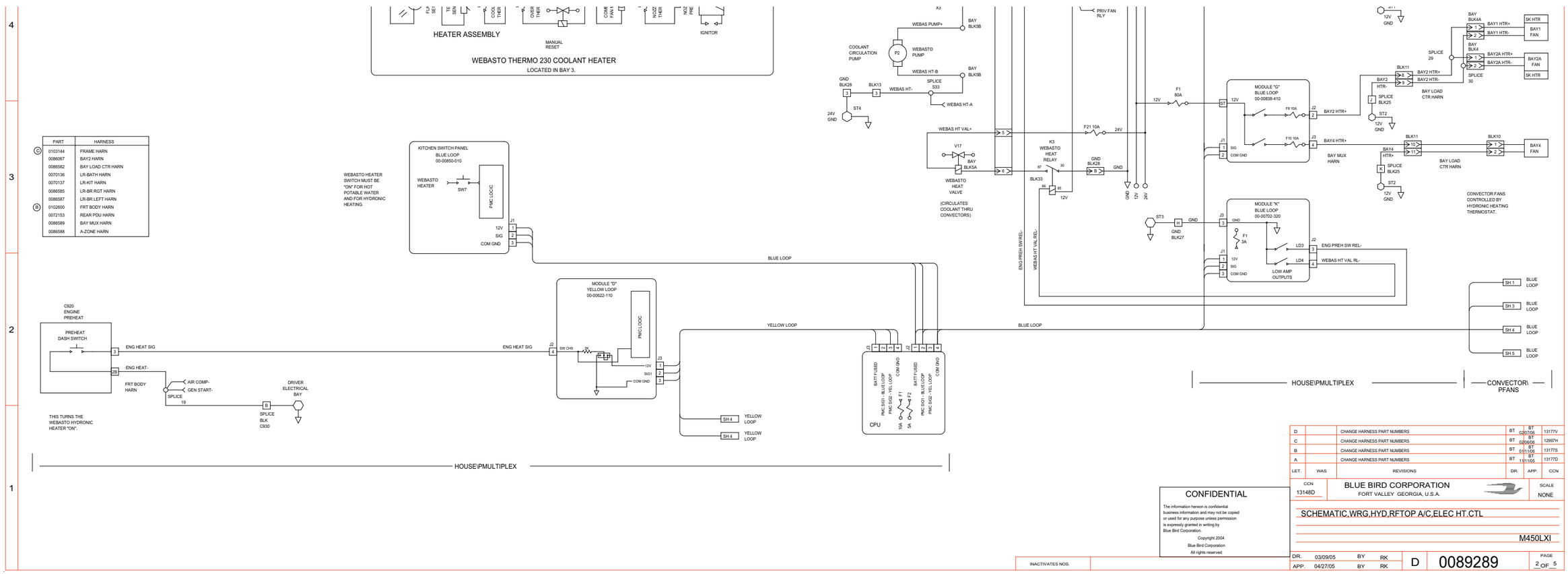

LET.	WAS	REVISIONS	DR.	APP.	CCN
D		CHANGE HARNESS PART NUMBERS	BT 02/07/06	BT	13177V
C		CHANGE HARNESS PART NUMBERS	BT 02/06/06	BT	12997H
B		CHANGE HARNESS PART NUMBERS	BT 01/11/06	BT	13177S
A		CHANGE HARNESS PART NUMBERS	BT 11/11/05	BT	13177D

CONFIDENTIAL

The information hereon is confidential business information and may not be copied or used for any purpose unless permission is expressly granted in writing by Blue Bird Corporation.

Copyright 2004
Blue Bird Corporation
All rights reserved

INACTIVATES NOS.

CCN 13148D

BLUE BIRD CORPORATION
FORT VALLEY GEORGIA, U.S.A.

SCALE NONE

SCHEMATIC,WRG,HYD,RFTOP A/C,ELEC HT.CTL

M450LXI

DR. 03/09/05 BY RK
APP. 04/27/05 BY RK

D 0089289

PAGE 2 OF 5

Wiring Schematic 0089289 - Schematic, Wiring, Hyd, Rftop A/C, Elec. Ht, Ctl. - Page 3 of 5

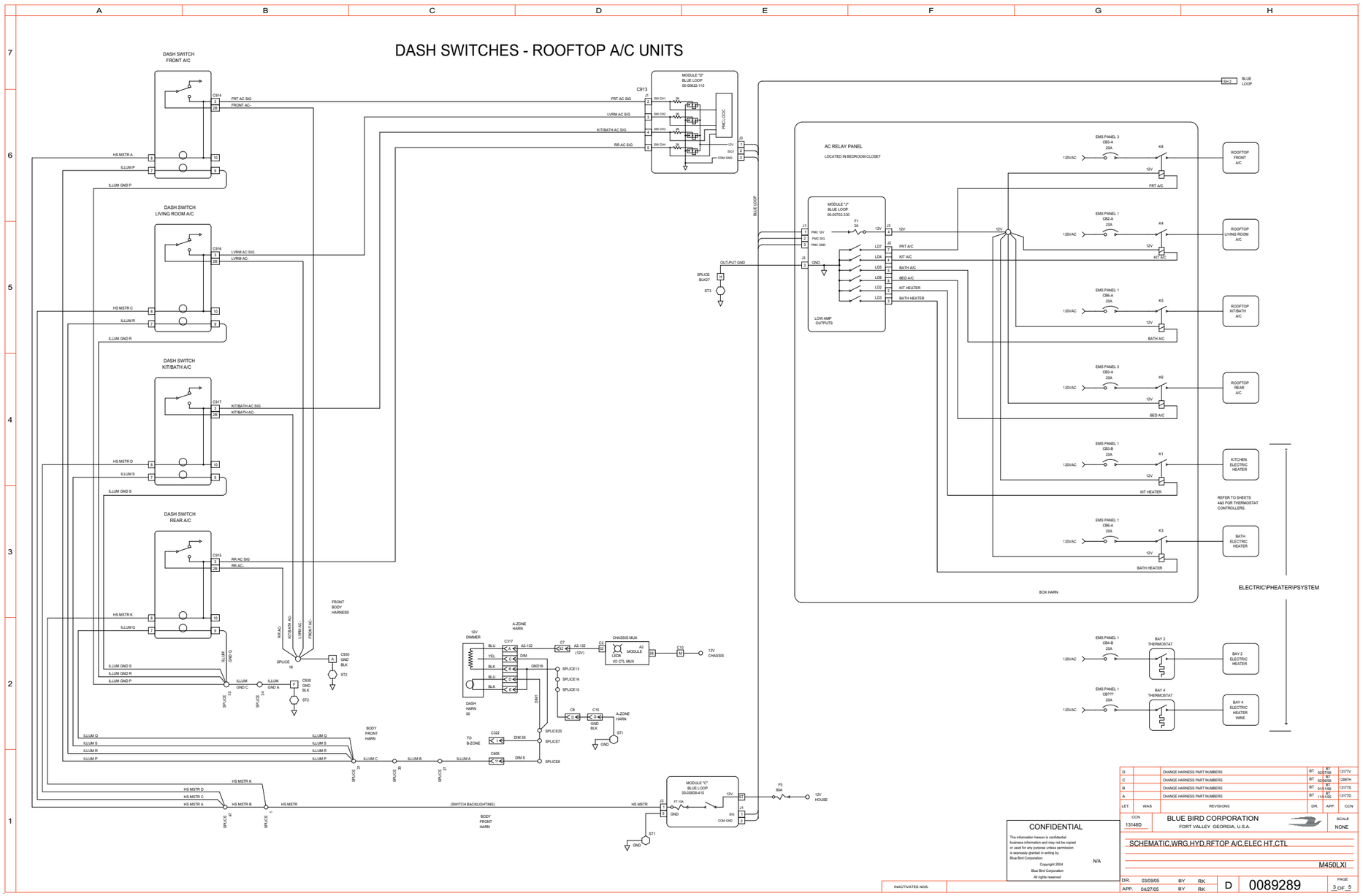

Wiring Schematic 0089289 - Schematic, Wiring, Hyd, Rftop A/C, Elec. Ht, Ctl. - Page 4 of 5

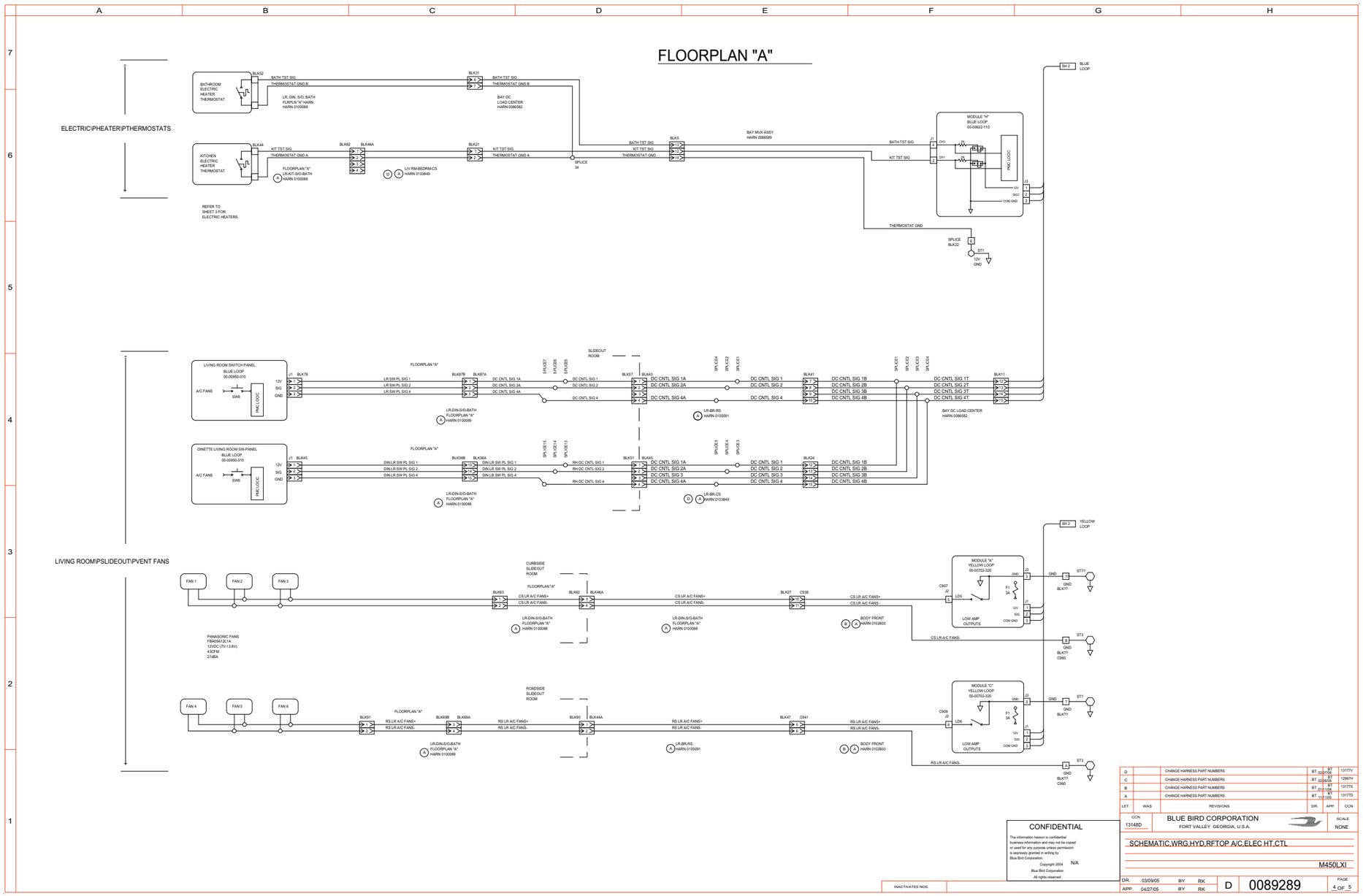
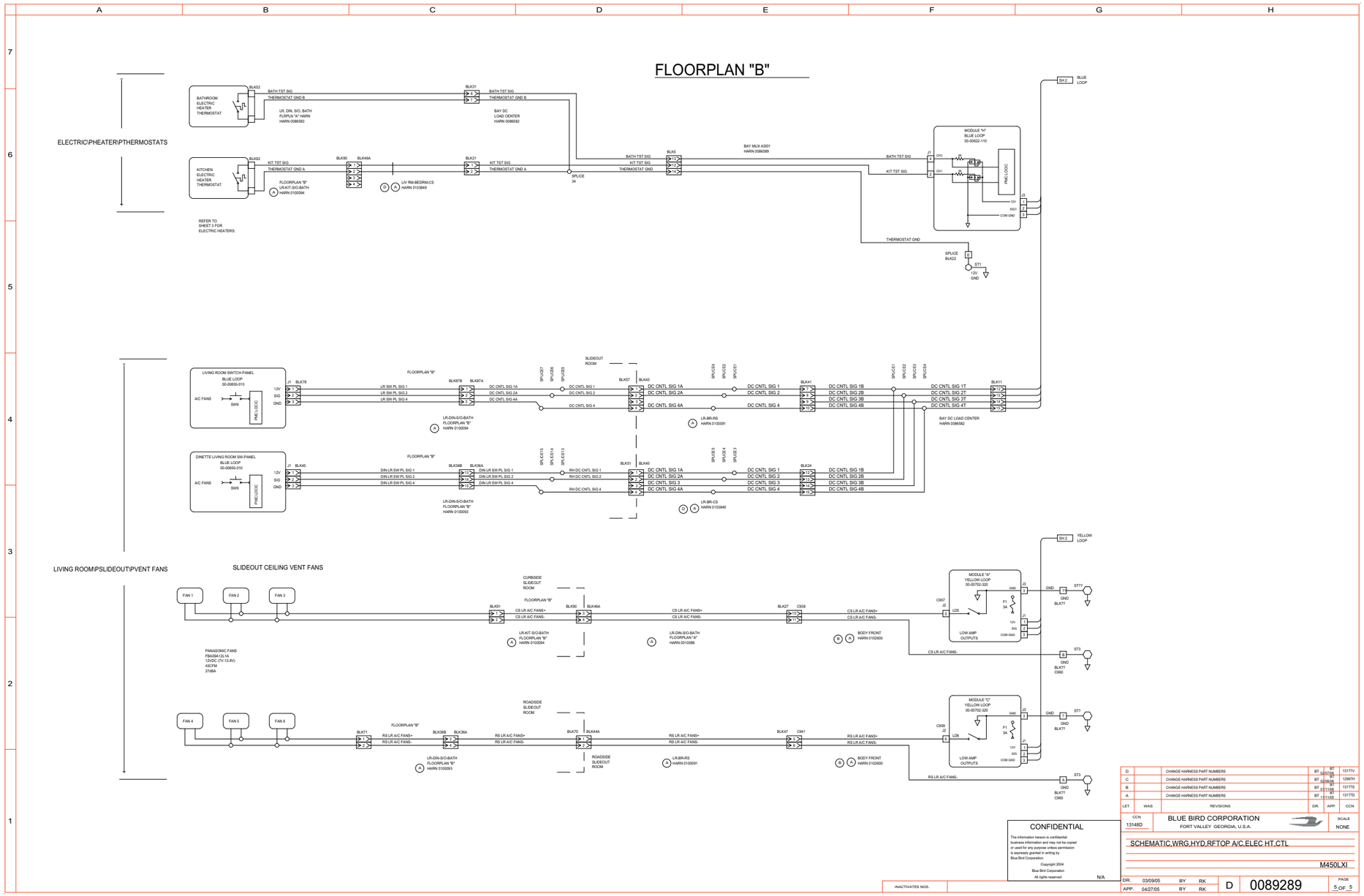
Wiring Schematic 0089289 - Schematic, Wiring, Hyd, Rftop A/C, Elec. Ht, Ctl. - Page 5 of 5